Embassy of the United States of America

Tokyo, Japan

February 19, 2016

Dear Prospective Offerors:

Subject: Solicitation Number SJA800-16-R-0006
Window Sash Replacement Services

The Embassy of the United States of America seeks to enter into a contract with a qualified, responsible, and reliable firm with sufficient knowledge and facilities for obtaining window sash replacement services for Security Marine Guards Quarters at the U.S. Embassy apartment compound in Tokyo, Japan.

Note: As required by U.S. Government's federal acquisition regulation (FAR), prospective offeror shall be registered in the System for Award Management (SAM) database prior to award of a contract. The website link providing additional vendor registration information is as follow: https://www.sam.gov/portal/SAM/#1#1

If you are interested in submitting a proposal on this project, follow the instructions in Section L of the solicitation, complete the required portions of the enclosed document, and submit to the address shown on the next page.

1. Pre-proposal Conference and Site Visit

(a) To provide all the offerors with a uniform explanation of requirements, the Embassy will hold a pre-proposal conference and site visit, as follows:

Date: Tuesday, March 1, 2016
Time: From 2:00 p.m. to on/about 3:30 p.m.
Location: Meet at Grew Gate of U.S. Embassy Apartment Compound
2-1-1 Roppongi, Minato-ku, Tokyo 106-0032

(b) All interested offerors who wish to attend must submit individual name(s), company name/address, telephone/fax numbers, and e-mail address to Jin Yoshikawa at facsimile number 03-3224-5179 or e-mail YoshikawaJX@state.gov by no later than 12:00 noon, Tuesday, March 1, 2016 (local time), to arrange entry to the compound.

(c) Attendee(s) must present an identification (ID) card with photo on it (e.g. driver's license, passport, etc.) as it is required for entering the compound.

2. Questions

Following the conference, offerors may submit questions (in English) in regard to this solicitation by 12:00 noon, Thursday, March 3, 2016 (local time) via facsimile at 03-3224-5179 or e-mail at YoshikawaJX@state.gov. All questions will be consolidated and one response will be prepared and posted on the Embassy's website, the same website from where you obtained the solicitation documents.

3. Proposals

Proposals must be submitted in a sealed envelope marked "Proposal Enclosed" and received by no later than **4:00 p.m., Tuesday, March 22, 2016 (local time)** at the address shown below. No proposals will be accepted after this time and no electronic proposals shall be accepted.

U.S. Embassy
1-10-5 Akasaka
Minato-ku, Tokyo 107-8420
Attn: Contracting Officer
(RFQ No. SJA800-16-R-0006)

It is understood that no payment will be made for preparation and submission of your proposal.

Thank you in advance for your interest and your time in participating in the solicitation process.

Sincerely,

John D. Nordlander
Contracting Officer

Enclosure:
Solicitation SJA800-16-R-0006

OMB APPROVAL NO. 2700-0042

SOLICITATION, OFFER, AND AWARD (Construction, Alteration, or Repair)	1. SOLICITATION NO.	2. TYPE OF SOLICITATION	3. DATE ISSUED	PAGE OF PAGES
	SJA800-16-R-0006	[ ] SEALED BID (IFB) [✓] NEGOTIATED (RFP)	February 19, 2016	1 57

IMPORTANT - The "offer" section on the reverse must be fully completed by offeror.

4. CONTRACT NUMBER	5. REQUISITION/PURCHASE REQUEST NO.	6. PROJECT NO.
	PR5051860 / PR5044557	

7. ISSUED BY CODE	8. ADDRESS OFFER TO
GSO/Procurement Unit U.S. Embassy 1-10-5 Akasaka Minato-ku, Tokyo 107-8420 Japan	See Item 7.

9. FOR INFORMATION CALL:	A. NAME	B. TELEPHONE NO. (*NO COLLECT CALLS*)
➔	YoshikawaJX@state.gov	03-3224-5756

SOLICITATION

NOTE: In sealed bid solicitations "offer" and "offeror" mean "bid" and "bidder."

10. THE GOVERNMENT REQUIRES PERFORMANCE OF THE WORK DESCRIBED IN THESE DOCUMENTS:

Section A: Solicitation, Offer, and Award*
**This is the Standard Form 1442, i.e. pages 1 and 2 of this document.*
Section B: Supplies or Services and Prices/Costs
Section C: Description/Specifications/Statement of Work
Section D: Packaging and Marking
Section E: Inspection and Acceptance
Section F: Deliveries or Performance
Section G: Contract Administration Data
Section H: Special Contract Requirements
Section I: Contract Clauses
Section J: List of Attachments
Section K: Representations, Certifications, and Other Statements of Offerors
Section L: Instructions, Conditions, and Notices to Offerors
Section M: Evaluation Factors for Award

Attachment J-1 - Statement of Work
Attachment J-2 - Drawings
Attachment J-3 - Breakdown of Proposal Price
Attachment J-4 - Personal History Statement

11. The Contractor shall begin performance from the date specified on the Notice to Proceed and complete it within 90 calendar days. This performance period is [✓]Mandatory, [ ]Negotiable. (See _____)

12A. THE CONTRACTOR MUST FURNISH ANY REQUIRED PERFORMANCE OR PAYMENT BOND?	12B. CALENDAR DAYS AFTER CONTRACT AWARD
[ ]YES, [✓]NO	**N/A**

13. ADDITIONAL SOLICITATION REQUIREMENTS:

A. Sealed offers in one original to perform the work required are due at the place specified in Item 8 above by 4:00 p.m., Tuesday, March 22, 2016. If this is a sealed bid solicitation, offers must be publicly opened at that time. Sealed envelopes containing offers shall be marked to show the offeror's name and address, the solicitation number, and the date and time offers are due.

B. An offer guarantee [ ]is, [✓]is not required.

C. All offers are subject to the (1) work requirements, and (2) other provisions and clauses incorporated in the solicitation in full text or by reference.

D. Offers providing less than 180 calendar days for Government acceptance after the date offers are due will not be considered and will be rejected.

OFFER *(Must be fully completed by offeror)*

14. COMPANY NAME AND ADDRESS OF OFFEROR *(Include ZIP Code)*	15. TELEPHONE AND FAX NUMBERS *(Include area code)*
DUNS No.:	16. REMITTANCE ADDRESS *(Include only if different than Item 14)*
CODE FACILITY CODE	

17. The offeror agrees to perform the work at the prices specified below in strict accordance with the terms of this solicitation, if this offer is accepted by the Government within _____ calendar days after the date offers are due. *(Insert any number equal to or greater than the minimum requirement stated in Item 13D. Failure to insert any number means the offeror accepts the minimum in Item 13D.*

AMOUNTS →

18. The offeror agrees to furnish any required performance and payment bonds.

19. ACKNOWLEDGMENT OF AMENDMENTS

The offeror acknowledges receipt of amendments to the solicitation – give number and date of each.

AMENDMENT NO.										
DATE										

20A. NAME AND TITLE OF PERSON AUTHORIZED TO SIGN OFFER *(Type or print)*	20B. SIGNATURE	20C. OFFER DATE

AWARD *(To be completed by Government)*

21. ITEMS ACCEPTED

Subsection B.1 Contract Price

22. AMOUNT	23. ACCOUNTING AND APPROPRIATION DATA

24. SUBMIT ONE ORIGINAL INVOICE TO ADDRESS SHOWN IN →	ITEM 27	25. OTHER THAN FULL AND OPEN COMPETITION PURSUANT TO ☐ 10 U.S.C. 2304(c)( ) ☐ 41 U.S.C. 253(c)( )
26. ADMINISTERED BY CODE GSO/Procurement Unit U.S. Embassy 1-10-5 Akasaka Minato-ku, Tokyo 107-8420		27. PAYMENT WILL BE MADE BY Financial Management Center U.S. Embassy 1-10-5 Akasaka Minato-ku, Tokyo 107-8420

CONTRACTING OFFICER WILL COMPLETE ITEM 28 OR 29 AS APPLICABLE

☐ 28. NEGOTIATED AGREEMENT *(Contractor is required to sign this document and return one copy to issuing office.)* Contractor agrees to furnish and deliver all items or perform all work, requisitions identified on this form and any continuation sheets for the consideration slated in this contract. The rights and obligations of the parties to this contract shall be governed by (a) this contract award, (b) the solicitation, and (c) the clauses, representations, certifications, and specifications incorporated by reference in or attached to this contract.	☐ 29. AWARD *(Contractor is not required to sign this document.)* Your offer on this solicitation is hereby accepted as to the items listed. This award consummates the contract, which consists of (a) the Government solicitation and your offer, and (b) this contract award. No further contractual document is necessary.
30A. NAME AND TITLE OF CONTRACTOR OR PERSON AUTHORIZED TO SIGN *(Type or print)*	31A. NAME OF CONTRACTING OFFICER Adham Z. Loutfi

30B. SIGNATURE	30C. DATE	31B. UNITED STATES OF AMERICA BY	31C. AWARD DATE

Section B: Supplies or Services and Prices/Costs

B.1 Contract Price. The Contractor shall complete all work (including furnishing all labor, material, equipment, and services) required under this contract for the following firm fixed price and within the time specified. This price shall include, but not limited to, all labor, materials, insurance, overhead, profit, and disposal of removed materials.

One Project: ¥_____

The U.S. Embassy Tokyo is exempt from Japanese consumption taxes; therefore, such taxes shall not be included in the price nor charged on invoices. After receipt of the Contractor's invoice, the Government will provide the Contractor with a signed Certificate of Tax Exemption Purchase for Foreign Establishments.
(For non-Designated Stores, please visit the following link for registration:
http://www.nta.go.jp/tetsuzuki/shinsei/annai/shohi/annai/23120184.htm)

B.2 Type of Contract. This is a firm, fixed-price contract payable entirely in Japanese Yen. No additional sums will be payable for any escalation in the cost of materials, equipment or labor, or because of the Contractor's failure to properly estimate or accurately predict the cost or difficulty of achieving the results required. The U.S. Government will not adjust the contract price due to fluctuations in currency exchange rates. The U.S. Government will only make changes in the contract price or time to complete due to changes made by the U.S. Government in the work to be performed, or by delays caused by the U.S. Government.

The U.S. Government will make payments based on quantities and unit prices only to the extent specifically provided in the contract.

Section C: Description/Specifications/Statement of Work

C.1 Character and Scope of Work. The Contractor shall furnish and install all materials required by this contract. The Statement of Work is set forth in Section J as Attachment J-1 and the contract drawings are set forth in Section J as Attachment J-2.

C.2 Drawings. In case of differences between small and large-scale drawings, the latter will govern. Where a portion of the work is drawn in detail and the remainder of the work is indicated in outline, the parts drawn in detail shall apply also to all other portions of the work.

Section D: Packaging and Marking

The Contractor shall mark materials delivered to the site as follows:

Mitsui Housing Compound
Attn: Facility Management Office
2-1-1 Roppongi
Minato-ku, Tokyo 106-0032
Japan

Section E: Inspection and Acceptance

E.1 FAR 52.252-2 Clauses Incorporated by Reference (FEB 1998)

This contract incorporates the following clauses by reference, with the same force and effect as if they were given in full text. Upon request, the Contracting Officer will make their full text available. Also, the full text of a clause may be accessed electronically at: http://acquisition.gov/far/index.html or http://farsite.hill.af.mil/vffara.htm. Please note these addresses are subject to change.

If the Federal Acquisition Regulation (FAR) is not available at the locations indicated above, use the Department of State Acquisition website at http://www.statebuy.state.gov/ to access the links to the FAR. You may also use an Internet "search engine" (for example, Google, Yahoo or Excite) to obtain the latest location of the most current FAR.

E.2 The following Federal Acquisition Regulation (FAR) clauses are incorporated by reference (48 CFR CH. 1):

Clause	Title and Date
52.204-18	Commercial and Government Entity Code Maintenance (JUL 2015)
52.204-19	Incorporation by Reference of Representations and Certifications (DEC 2014)
52.232-27	Prompt Payment for Construction Contracts (JUL 2013)
52.246-12	Inspection of Construction (AUG 1996)

E.3 Quality Assurance. The Contractor shall institute an appropriate inspection system set forth in a Quality Assurance Plan. The plan shall include checklists of duties to be carried out, ensuring these duties are carried out by the supervisory staff and senior employees, and carrying out weekly inspections to determine whether the various services are being performed according to the contract. The Contractor shall provide copies of the weekly inspection reports to the COR.

The Contractor shall correct and improve promptly any shortcomings and substandard conditions noted during inspections. The Contractor shall bring any conditions beyond the responsibility of the Contractor to the attention of the Contracting Officer or COR.

E.3.1 Monthly Report. The Contractor shall submit to the COR a monthly progress report, along with the monthly invoice, summing up observations resulting from the inspections, progress, difficulties or irregularities encountered, resolution of problems, measures

taken to improve conditions, recommendations, and other matters related to this contract.

E.3.2 Inspection by Government. The COR, or his/her authorized representatives, will inspect from time to time the services being performed and the supplies furnished to determine whether work is being performed in a satisfactory manner, and that all supplies are of acceptable quality and standards.

The Contractor shall be responsible for any countermeasures or corrective action, within the scope of this contract, which may be required by the Contracting Officer as a result of such inspection.

E.4 Substantial Completion

E.4.1 Definitions

(a) "Substantial Completion" means the stage in the progress of the work as determined and certified by the Contracting Officer in writing to the Contractor, on which the work (or a portion designated by the Government) is sufficiently complete and satisfactory. Substantial completion means that the property may be occupied or used for the purpose for which it is intended, and only minor items such as touch-up, adjustments, and minor replacements or installations remain to be completed or corrected which:

(1) do not interfere with the intended occupancy or utilization of the work, and

(2) can be completed or corrected within the time period required for final completion.

(b) The "date of substantial completion" means the date determined by the Contracting Officer or authorized Government representative as of which substantial completion of the work has been achieved.

E.4.2 Use and Possession upon Substantial Completion. The U.S. Government shall have the right to take possession of and use the work upon substantial completion. Upon notice by the Contractor that the work is substantially complete (a Request for Substantial Completion) and an inspection by the Contracting Officer or an authorized Government representative (including any required tests), the Contracting Officer shall furnish the Contractor a Certificate of Substantial Completion. The certificate shall be accompanied by a Schedule of Defects listing items of work remaining to be performed, completed or corrected before final completion and acceptance. Failure of the Contracting Officer to list any item of work shall not relieve the Contractor of responsibility for complying with the terms of the contract. The U.S. Government's possession or use upon substantial completion shall not be deemed an acceptance of any work under the contract.

E.5 Final Completion and Acceptance

E.5.1 Definitions

(a) "Final completion and acceptance" means the stage in the progress of the work as determined by the Contracting Officer and confirmed in writing to the Contractor, at which all work required under the contract has been completed in a satisfactory manner, subject to the discovery of defects after final completion, and except for items specifically excluded in the notice of final acceptance.

(b) The "date of final completion and acceptance" means the date determined by the Contracting Officer when final completion of the work has been achieved, as indicated by written notice to the Contractor.

E.5.2 Final Inspection and Tests. The Contractor shall give the Contracting Officer at least five days advance written notice of the date when the work will be fully completed and ready for final inspection and tests. Final inspection and tests will be started not later than the date specified in the notice unless the Contracting Officer determines that the work is not ready for final inspection and so informs the Contractor.

E.5.3 Final Acceptance. If the Contracting Officer is satisfied that the work under the contract is complete (with the exception of continuing obligations), the Contracting Officer shall issue to the Contractor a notice of final acceptance and make final payment upon:

(a) satisfactory completion of all required tests,

(b) a final inspection that all items by the Contracting Officer listed in the Schedule of Defects have been completed or corrected and that the work is finally complete (subject to the discovery of defects after final completion), and

(c) submittal by the Contractor of all documents and other items required upon completion of the work, including a final request for payment (Request for Final Acceptance).

Section F: Deliveries or Performance

F.1 FAR 52.252-2 Clauses Incorporated by Reference (FEB 1998)

This contract incorporates the following clauses by reference, with the same force and effect as if they were given in full text. Upon request, the Contracting Officer will make their full text available. Also, the full text of a clause may be accessed electronically at: http://acquisition.gov/far/index.html or http://farsite.hill.af.mil/vffara.htm. Please note these addresses are subject to change.

If the Federal Acquisition Regulation (FAR) is not available at the locations indicated above, use the Department of State Acquisition website at http://www.statebuy.state.gov/ to access the links to the FAR. You may also use an Internet "search engine" (for example, Google, Yahoo or Excite) to obtain the latest location of the most current FAR.

F.2 The following Federal Acquisition Regulation (FAR) clauses are incorporated by reference (48 CFR CH. 1):

Clause	Title and Date
52.242.14	Suspension of Work (APR 1984)

F.3 FAR 52.211-10 Commencement, Prosecution, and Completion of Work (APR 1984)

The Contractor shall be required to:

(a) commence work under this contract from the date specified on the Notice to Proceed,

(b) prosecute the work diligently, and

(c) complete the entire work in 90 calendar days after commencement of the work. The time stated for completion shall include final cleanup of the premises and completion of "punch list" items.

F.4 Liquidated Damages

F.4.1 FAR 52.211-12 Liquidated Damages – Construction (SEP 2000)

(a) If the Contractor fails to complete the work within the time specified in the contract, or any extension, the Contractor shall pay liquidated damages to the U.S. Government in the amount of ¥50,000 for each day of delay until the work is completed or accepted.

(b) If the U.S. Government terminates the Contractor's right to proceed, liquidated damages will continue to accrue until the work is completed. These liquidated damages are in addition to excess costs of repurchase under the Default clause.

F.4.2 Assessment and Apportionment of Liquidated Damages. Liquidated damages will be assessed from the completion date indicated in the contract or extensions thereof to the date of substantial completion as actually achieved by the Contractor, as determined by the Contracting Officer.

F.5 Contractor's Submission of Construction Schedules

(a) The time for submission of the schedules referenced in Section I, 52.236-15, "Schedules for Construction Contracts", paragraph (a), is hereby modified to reflect the due date for submission as "10 days after receipt of an executed contract."

(b) These schedules shall include the time by which shop drawings, product data, samples and other submittals required by the contract will be submitted for approval.

(c) The Contractor shall revise such schedules -

(1) to account for the actual progress of the work,

(2) to reflect approved adjustments in the performance schedule, and

(3) as required by the Contracting Officer to achieve coordination with work by the Government and any separate contractors used by the Government.

The Contractor shall submit a schedule which sequences work so as to minimize disruption at the job site.

(d) All schedules shall be in the English language and any system of dimensions (English or metric) shown shall be consistent with that used in the contract. No extension of time shall be allowed due to a delay by the Government in approving such deliverables if the Contractor has failed to act promptly and responsively in submitting its deliverables. The Contractor shall identify each deliverable as required by the contract.

F.6 Acceptance of Schedule. When the U.S. Government has accepted any time schedule, it shall be binding upon the Contractor. The completion date is fixed and may be extended only by a written contract modification signed by the Contracting Officer. Acceptance or approval of any schedule or revision thereof by the Government shall not -

(1) extend the completion date or obligate the Government to do so,

(2) constitute acceptance or approval of any delay, or

(3) excuse the Contractor from or relieve the Contractor of its obligation to maintain the progress of the work and achieve final completion by the established completion date.

F.7 Notice of Delay. If the Contractor receives a notice of any change in the work, or if any other conditions arise which are likely to cause or are actually causing delays which the Contractor believes may result in late completion of the project, the Contractor shall notify the Contracting Officer. The Contractor’s notice shall state the effect, if any, of such change or other conditions upon the approved schedule, and shall state in what respects, if any, the relevant schedule or the completion date should be revised. The Contractor shall give this notice not more than ten (10) days after the first event-giving rise to the delay or prospective delay. Only the Contracting Officer may make revisions to the approved time schedule.

F.8 Notice to Proceed

(a) After receiving and accepting any bonds or evidence of insurance, the Contracting Officer will issue the Contractor a Notice to Proceed. The Contractor shall then prosecute the work commencing and completing performance not later than the time period established in the contract.

(b) It is possible that the Contracting Officer may elect to issue the Notice to Proceed before receipt and acceptance of any bonds. Issuance of a Notice to Proceed by the Government before receipt of the required bonds or policies shall not be a waiver of the requirement to furnish these documents.

F.9 Working Hours. All work shall be performed during the hours between 08:30 and 17:30, Monday through Friday, excluding U.S. and Japanese holidays observed by the U.S. Embassy Tokyo, Japan (see the holidays identified below for reference). Other hours, if requested by the Contractor, may be approved by the Contracting Officer's Representative. The Contractor shall give 24 hours in advance to COR who will consider any deviation from the hours identified above. Changes in work hours will not be a cause for a price increase.

The Department of State observes the following days as holidays: (*Note: Due to changes in observance of Japanese holidays each year, the holidays listed below are for reference only.*)

U.S. Federal Holidays;
*1st January (New Year's Day),
third Monday in January (Martin Luther King, Jr. Day),
third Monday in February (President's Day),

last Monday in May (Memorial Day),
4th July (Independence Day),
first Monday in September (Labor Day),
*second Monday in October (Columbus Day),
11th November (Veteran's Day),
fourth Thursday in November (Thanksgiving Day), and
25th December (Christmas Day).

Japanese National Holidays;
*1st January (New Year's Day or Ganjitsu),
second Monday in January (Adult’s Day or Seijin-no-hi),
11th February (National Foundation Day or Kenkoku Kinen-no-hi),
20th March (Spring Vernal Equinox Day or Shunbun-no-hi),
29th April (Showa-no-hi),
3rd May (Constitution Day or Kenpou Kinen-bi),
4th May (Greenery Day or Midori-no-hi),
5th May (Children’s Day or Kodomo-no-hi),
third Monday in July (Marine Day or Umi-no-hi),
11th August (Mountain Day or Yama-no-hi),
third Monday in September (Respect for the Aged Day or Keirou-no-hi),
22nd September (Autumn Vernal equinox Day or Shuubun-no-hi),
*second Monday in October (Health Sports Day or Taiiku-no-hi),
3rd November (Culture Day or Bunka-no-hi),
23rd November (Labor Thanksgiving Day or Kinrou Kanshya-no-hi), and
23rd December (Emperor’s Birthday or Tennou Tanjou-bi)

*Day that holiday overlaps in both countries.

Any other day designated by Federal law, Executive Order, or Presidential Proclamation.

When any such day falls on a Saturday, the preceding Friday is observed; when any such day falls on a Sunday, the following Monday is observed. Observance of such days by Government personnel shall not be cause for additional period of performance or entitlement to compensation except as set forth in the contract. If the Contractor's personnel work on a holiday, no form of holiday or other premium compensation will be reimbursed either as a direct or indirect cost, unless authorized pursuant to an overtime clause elsewhere in this contract.

F.10 Excusable Delays. The Contractor will be allowed time, not money, for excusable delays as defined in FAR 52.249-10, Default. Examples of such cases include:

(1) acts of God or of the public enemy,
(2) acts of the United States Government in either its sovereign or contractual capacity,
(3) acts of the government of the host country in its sovereign capacity,

(4) acts of another contractor in the performance of a contract with the Government,
(5) fires,
(6) floods,
(7) epidemics,
(8) quarantine restrictions,
(9) strikes,
(10) freight embargoes,
(11) delays in delivery of Government furnished equipment, and
(12) unusually severe weather.

In each instance, the failure to perform must be beyond the control and without the fault or negligence of the Contractor, and the failure to perform. Furthermore, the failure:

(1) must be one that the Contractor could not have reasonably anticipated and taken adequate measures to protect against,
(2) cannot be overcome by reasonable efforts to reschedule the work, and
(3) directly and materially affects the date of final completion of the project.

F.11 Preconstruction Conference. A pre-construction conference will be held 10 days after contract award at Facility Management Office/Grew Tower of Mitsui Housing Compound, located at 2-1-1 Roppongi, Minato-ku, Tokyo 106-0032, to discuss the schedule, submittals, notice to proceed, mobilization and other important issues that affect construction progress. See FAR 52.236-26, Pre-Construction Conference in Section I.

F.12 Deliverables. The following items shall be delivered under this contract:

Description	Quantity	Delivery Date	Deliver To:
E.3 Quality Assurance – Inspection Report	1	10 days after award	COR
E.3.1 Monthly Progress Report	1	7th day of the following month	COR
E.3.2 Inspection Reports	1	As requested	COR
E.4.2 Request for Substantial Completion	1	5 days before Inspection	COR
E.5.2 Request for Final Acceptance	1	5 days before Inspection	COR

F.5(a) Construction Schedule	1	10 days after award	COR
F.5(c) Updates to Construction Schedule	1	Last day of each Month	COR
F.11 Preconstruction Conference	1	10 days after award	COR
G.3.2 Payment Request	1	Last day of each Month	COR
H.2.4 Evidence of Insurance	1	10 days after award	CO
H.11 Safety Plan	1	10 days after award	COR
H.13.2 Personal History Statement	1	10 days after award	COR
H.17.2 Differing Site Condition	1	Within 10 days of Occurrence	CO

Section G: Contract Administration Data

G.1 Authority of Contracting Officer. All work shall be performed under the general direction of the Contracting Officer, who alone shall have the power to bind the U.S. Government and to exercise the rights, responsibilities, authorities and functions vested by the contract.

G.2 Monitoring of the Contractor

G.2.1 DOSAR 652.242-70 Contracting Officer’s Representative (COR) (AUG 1999)

(a) The Contracting Officer may designate in writing one or more Government employees, by position title, to take action for the Contracting Officer under this contract. Each designee shall be identified as a Contracting Officer’s Representative (COR). Such designation(s) shall specify the scope and limitations of the authority so delegated; provided, that the designee shall not change the terms or conditions of the contract, unless the COR is a warranted Contracting Officer and this authority is delegated in the designation.

(b) The COR for this contract is the Maintenance Supervisor at the U.S. Embassy in Tokyo, Japan.

G.2.2 Duties. The COR is responsible for inspection and acceptance of services. These duties include review of Contractor invoices, including the supporting documentation required by the contract. The COR may provide technical advice, substantive guidance, inspections, invoice approval, and other purposes as deemed necessary under the contract. The COR is designated as the authority to act for the Contracting Officer in matters concerning technical clarification, random inspection of Contractor performance to ensure compliance with contract specifications and acceptance of the Contractor's performance under this contract. The COR will coordinate all work with the Contractor during the term of this contract. The COR is not authorized to alter the contract's terms, or conditions, including the design to budget parameter. Such changes must be authorized by the Contracting Officer in a written modification to the contract. Reference to the project architect within documents incorporated into this contract shall be read to mean COR.

G.3 Payment

G.3.1 General. Payments are subject to FAR 52.232-5, “Payments Under Fixed-Price Construction Contracts.”

G.3.2 Detail of Payment Requests. Each application for payment shall cover the value of labor and materials completed and in place, including a prorated portion of overhead and profit. The Government will make payments no more frequently than monthly, unless otherwise

provided in this contract. The Contractor shall address invoices to:

Financial Management Center
U.S. Embassy
1-10-5 Akasaka
Minato-ku, Tokyo 107-8420
Japan

G.3.3 Payments to Subcontractors. The Contractor shall make timely payment from the proceeds of the progress or final payment for which request is being made to subcontractors and suppliers following the Contractor's contractual arrangements with them.

G.3.4 Evaluation by the Contracting Officer. Following receipt of the Contractor's request for payment, and on the basis of an inspection of the work, the Contracting Officer shall make a determination as to the amount that is then due. If the Contracting Officer does not approve payment of the full amount applied for, less the retainage addressed in FAR 52.232-5, the Contracting Officer shall advise the Contractor of the reasons.

G.3.5 Additional Withholding. The U.S. Government may withhold from payments due the Contractor any amounts as may be considered necessary to cover –

(a) wages or other amounts due the Contractor's employees on this project;

(b) wages or other amounts due employees of subcontractors on this project;

(c) amounts due suppliers of materials or equipment for this project; and

(d) any other amounts for which the Contractor may be held liable under this contract, including but not limited to the actual or prospective costs of correction of defective work and prospective liquidated damage when the Contractor has failed to make adequate progress.

This withholding is independent of monies retained by the Government under FAR 52.232-5, or otherwise as permitted to be retained under this contract.

G.3.6 Payment. Under the authority of 52.232-27(a) the 14 day period identified in FAR 52.232-27(a)(1)(i)(A) is hereby changed to 30 days.

Section H: Special Contract Requirements

H.1 Reserved

H.2 Insurance

H.2.1 Amount of Insurance. The Contractor is required by FAR 52.228-5 to provide whatever insurance is legally necessary. The Contractor, shall, at its own expense, provide and maintain during the entire performance period the following insurance amounts:

General Liability (includes premises/operations, collapse hazard, products, completed operations, contractual, independent contractors, broad form property damage, personal injury)

(a) Bodily Injury on or off the site stated in Japanese Yen:

Per Occurrence	¥30,000,000
Cumulative	¥90,000,000

(b) Property Damage on or off the site in Japanese Yen:

Per Occurrence	¥3,000,000
Cumulative	¥9,000,000

The foregoing types and amounts of insurance are the minimums required. The Contractor shall obtain any other types of insurance required by local law or that are ordinarily or customarily obtained in the location of the work. The limit of such insurance shall be as provided by law or sufficient to meet normal and customary claims.

The Contractor agrees that the Government shall not be responsible for personal injuries or for damages to any property of the Contractor, its officers, agents, servants, and employees, or any other person, arising from and incident to the Contractor's performance of this contract. The Contractor shall hold harmless and indemnify the Government from any and all claims arising there from, except in the instance of gross negligence on the part of the Government.

The Contractor shall obtain adequate insurance for damage to, or theft of, materials and equipment in insurance coverage for loose transit to the site or in storage on or off the site.

H.2.2 Government as Additional Insured. The general liability policy required of the Contractor shall name "the United States of America, acting by and through the Department of State", as an additional insured with respect to operations performed under this contract.

H.2.3 Insurance-related Disputes. Failure to agree to any adjustment contemplated under this contract regarding insurance shall be a dispute within the meaning of the clause in Section I, 52.233-1, Alternate I, "Disputes". Nothing in this clause shall excuse the Contractor from proceeding with the work.

H.2.4 Time for Submission of Evidence of Insurance. The Contractor shall provide evidence of the insurance required under this contract within 10 days after contract award. Failure to timely submit this evidence, in a form acceptable to the Contracting Officer, may result in rescinding or termination of the contract by the Government.

H.3 Definitions. In addition to the definitions provided in SECTION I, FAR 52.202-1 and DOSAR 652.202-70, the following definitions shall apply when used in connection with this contract:

(a) “Contract Drawings or Drawings,” where indicated by the context, means those drawings specifically listed in the construction contract or as later incorporated into the contract by contract modification.

(b) “Day” means a calendar day unless otherwise specifically indicated.

(c) “Host Country” means the country in which the project is located.

(d) “Material” means all materials, fixtures and other articles incorporated in, or which are intended to remain with, the project.

(e) “Notice to Proceed” means a written notice to the Contractor from the Contracting Officer authorizing the Contractor to proceed with the work under the contract as of a date set forth in the Notice.

(f) “Other Submittals” includes progress schedules, shop drawings, testing and inspection reports, and other information required by the contract to be submitted by the Contractor for information or approval by the Government.

(g) “Project Data” includes standard drawings, diagrams, layouts, schematics, descriptive literature, illustrations, schedules, performance and test data, and similar materials furnished by the Contractor to explain in detail specific portions of the work required by the contract.

(h) “Samples” are physical examples which illustrate materials, equipment or workmanship and establish standards by which the work will be judged.

(i) "Schedule of Defects" means the list of items, prepared in connection with substantial completion of the work or early occupancy or utilization of a portion thereof, which the Contracting Officer has designated as remaining to be performed, completed or corrected before the work will be accepted by the Government.

(j) "Separate Contractor" means a contractor, other than the Contractor or any of its subcontractors, to whom the Government has awarded a contact for construction of a portion of the project.

(k) "Work" means any and all permanent construction which is intended to be incorporated into the finished project and required to be performed or otherwise provided by the Contractor under this contract, unless otherwise indicated by the context.

H.4 Ownership and Use of Documents

H.4.1 Ownership and Use of Drawings, Specifications, and Models

(a) Ownership. All specifications, drawings, and copies thereof, and models, are the property of the U.S. Government.

(b) Use and Return. The Contractor shall not use or allow others to use the documents described in (a) above on other work. The Contractor shall return or account for the signed contractor set and additional copies provided to or made by the Contractor upon final completion of the work.

H.4.2 Supplemental Documents. The Contracting Officer shall furnish from time to time such detailed drawings and other information as is considered necessary, in the opinion of the Contracting Officer, to interpret, clarify, supplement, or correct inconsistencies, errors or omissions in the Contract documents, or to describe minor changes in the work not involving an increase in the contract price or extension of the contract time. The Contractor shall comply with the requirements of the supplemental documents, and unless the Contractor makes objection within 20 days, their issuance shall not provide for any claim for an increase in the Contract price or an extension of contract time.

H.4.3 Record Documents. The Contractor shall maintain at the project site:

(a) a current marked set of Contract drawings and specifications indicating all interpretations and clarifications, contract modifications, change orders, or any other departure from the contract requirements approved by the Contracting Officer; and

(b) a complete set of record shop drawings, product data, samples and other submittals as approved by the Contracting Officer.

H.4.4 “As-Built” Documents. After final completion of the work, but before final acceptance, the Contractor shall provide:

(a) complete set of "as-built" drawings, based on the record set of drawings, marked to show the details of construction as actually accomplished; and

(b) record shop drawings and other submittals, in the number and form as required by the specifications.

H.5 Governing Law. The laws of the United States shall govern the contract and its interpretation.

H.6 Reserved.

H.7 Laws and Regulations

H.7.1 Compliance Required. The Contractor shall, without additional expense to the U.S. Government, be responsible for complying with all laws, codes, ordinances, and regulations applicable to the performance of the work, including those of the host country, and with the lawful orders of any governmental authority having jurisdiction. Host country authorities may not enter the construction site without the permission of the Contracting Officer. Unless otherwise directed by the Contracting Officer, the Contractor shall comply with the more stringent of the requirements of such laws, regulations and orders and of the contract. In the event of a conflict between the contract and such laws, regulations and orders, the Contractor shall promptly advise the Contracting Officer of the conflict and of the Contractor's proposed course of action for resolution by the Contracting Officer.

H.7.2 Labor, Health and Safety Laws and Customs. The Contractor shall comply with all local labor laws, regulations, customs and practices pertaining to labor, safety, and similar matters, to the extent that such compliance is not inconsistent with the requirements of this contract.

H.7.3 Subcontractors. The Contractor shall give written assurance to the Contracting Officer that all subcontractors and others performing work on or for the project have obtained all requisite licenses and permits.

H.7.4 Evidence of Compliance. The Contractor shall submit proper documentation and evidence satisfactory to the Contracting Officer demonstrating compliance with this clause when directed by the Contracting Officer.

H.8 Responsibility of Contractor

H.8.1 Damage to Persons or Property. The Contractor shall be responsible for all damages to persons or property that occur as a

result of the Contractor's fault or negligence, and shall take proper safety and health precautions to protect the work, the workers, the public, and the property of others.

H.8.2 Responsibility for Work Performed. The Contractor shall be responsible for all materials delivered and work performed until final completion and acceptance of the entire work, except for any completed unit of work which may have been accepted in writing under the contract.

H.9 Construction Operations

H.9.1 Operations and Storage Areas

(a) Confinement to Authorized Areas. The Contractor shall confine all operations (including storage of materials) on Government premises to areas authorized or approved by the Contracting Officer.

(b) Vehicular Access. The Contractor shall, and in accordance with any regulations prescribed by the Contracting Officer, use only established site entrances and roadways.

H.9.2 Use of Premises

(a) Occupied Premises. If the premises are occupied, the Contractor, its subcontractors, and their employees shall comply with the regulations promulgated by the Government governing access to, operation of, and conduct while in or on the premises and shall perform the work required under this contract in such a manner as not to unreasonably interrupt or interfere with the conduct of Government business.

(b) Requests from Occupants. The Contractor shall refer any request from occupants of existing buildings to change the sequence of work to the Contracting Officer for determination.

(c) Access Limited. The Contractor, its subcontractors and their employees shall not have access to or be admitted into any building or portion of the site outside the areas designated in this contract except with the permission of the Contracting Officer.

H.10 Temporary Facilities and Services. The Contractor may erect temporary buildings (such as, storage sheds, shops, offices) and utilities only with the approval of the Contracting Officer’s Representative (COR). The cost of these temporary buildings is included in the contract fixed price. The temporary buildings and utilities shall remain the property of the Contractor and shall be removed by the Contractor at its expense upon completion of the work. With the written consent of the Contracting Officer, the buildings and utilities may be abandoned and need not be removed.

H.11 Safety

DOSAR 652.236-70 Accident Prevention (APR 2004)

(a) General. The Contractor shall provide and maintain work environments and procedures which will safeguard the public and U.S. Government personnel, property, materials, supplies, and equipment exposed to contractor operations and activities; avoid interruptions of U.S. Government operations and delays in project completion dates; and, control costs in the performance of this contract. For these purposes, the Contractor shall:

(1) Provide appropriate safety barricades, signs and signal lights;

(2) Comply with the standards issued by any local government authority having jurisdiction over occupational health and safety issues; and,

(3) Ensure that any additional measures the contracting officer determines to be reasonably necessary for this purpose are taken.

(4) For overseas construction projects, the contracting officer shall specify in writing additional requirements regarding safety if the work involves:
(i) scaffolding;
(ii) work at heights above two (2) meters;
(iii) trenching or other excavation greater than one (1) meter in depth;
(iv) earth moving equipment;
(v) temporary wiring, use of portable electric tools, or other recognized electrical hazards. Temporary wiring and portable electric tools require the use of a ground fault circuit interrupter (GFCI) in the affected circuits; other electrical hazards may also require the use of a GFCI;
(vi) work in confined spaces (limited exits, potential for oxygen less that 19.5 percent or combustible atmosphere, potential for solid or liquid engulfment, or other hazards considered to be immediately dangerous to life or health such as water tanks, transformer vaults, sewers, cisterns, etc.);
(vii) hazardous materials - a material with a physical or health hazard including but not limited to, flammable, explosive, corrosive, toxic, reactive or unstable, or any operations which creates any kind of contamination inside an occupied building such as dust from demolition activities, paints, solvents, etc.; or
(viii) hazardous noise levels.

(b) Records. The Contractor shall maintain an accurate record of exposure data on all accidents incident to work performed under this contract resulting in death, traumatic injury, occupational disease, or damage to or theft of property, materials, supplies,

or equipment. The contractor shall report this data in the manner prescribed by the contracting officer.

(c) Subcontracts. The Contractor shall be responsible for its subcontractors' compliance with this clause.

(d) Written program. Before commencing work, the Contractor shall:

(1) submit a written plan to the contracting officer for implementing this clause. The plan shall include specific management or technical procedures for effectively controlling hazards associated with the project; and,

(2) meet with the contracting officer to discuss and develop a mutual understanding relative to administration of the overall safety program.

(e) Notification. The Contracting Officer shall notify the contractor of any non-compliance with these requirements and the corrective actions required. This notice, when delivered to the Contractor or the Contractor's representative on site, shall be deemed sufficient notice of the non-compliance and corrective action required. After receiving the notice, the contractor shall immediately take corrective action. If the Contractor fails or refuses to promptly take corrective action, the contracting officer may issue an order suspending all or part of the work until satisfactory corrective action has been taken. The Contractor shall not be entitled to any equitable adjustment of the contract price or extension of the performance schedule on any suspension of work order issued under this clause.

H.12 Subcontractors and Suppliers

H.12.1 Claims and Encumbrances. The Contractor shall satisfy as due all lawful claims of any persons or entities employed by the Contractor, including subcontractors, material men and laborers, for all labor performed and materials furnished under this contract, including the applicable warranty or correction period, unless the U.S. Government shall be directly liable by contract. The Contractor shall not at any time permit any lien, attachment, or other encumbrance to be entered against or to remain on the building(s), or the premises, whether public or private, or any portion thereof, as a result of nonperformance of any part of this contract.

H.12.2 Approval of Subcontractors

(a) Review and Approval. The U.S. Government reserves the right to review proposed subcontractors for a period of five days before providing notice of approval or rejection of any or all subcontractors.

(b) Rejection of Subcontractors. The U.S. Government reserves the right to reject any or all subcontractors proposed if their participation in the project, as determined by the Contracting Officer, may cause damage to the national security interests of the United States. The Contractor agrees to promptly replace any subcontractor rejected by the U.S. Government under this clause.

H.13 Construction Personnel

H.13.1 Removal of Personnel. The Contractor shall maintain discipline at the site and at all times take all reasonable precautions to prevent any unlawful, riotous, or disorderly conduct by or among those at the site. The Contractor shall ensure the preservation of peace and protection of persons and property in the neighborhood of the project. The Contracting Officer may require, in writing, that the Contractor remove from the work any employee that the Contracting Officer deems incompetent, careless, insubordinate or otherwise objectionable, or whose continued employment on the project is deemed by the Contracting Officer to be contrary to the U.S. Government's interests.

H.13.2 Construction Personnel Security. After award of the contract, the Contractor has 10 calendar days to submit to the Contracting Officer a list of workers and supervisors assigned to this project for the Government to conduct all necessary security checks. It is anticipated that security checks will take 30 days to perform. Each individual shall complete and submit Personal History Statement (see Attachment J-4).

Failure to provide any of the above information may be considered grounds for rejections and/or re-submittal of the application. Once the Government has completed the security screening and approved the applicants a badge will be provided to the individual for access to the site. This badge may be revoked at any time due to the falsification of data, or misconduct on site. These passes must be displayed visibly by all Contractor personnel working on site. The Contractor shall inform its employees to be used under this contract that they may be subject to search by the Government when entering or leaving work. The Contractor shall return all passes upon conclusion of the contract.

H.14 Materials and Equipment

H.14.1 Selection and Approval of Materials

(a) Standard to Quality. All materials and equipment incorporated into the work shall be new and for the purpose intended, unless otherwise specified. All workmanship shall be of good quality and performed in a skillful manner that will withstand inspection.

(b) Selection by Contractor. Where the contract permits the Contractor to select products, materials or equipment to be incorporated in the work, or where specific approval is otherwise

required by the contract, the Contractor shall furnish a Submittal Register to the Contracting Officer, for approval. The Submittal Register shall include the names of the manufacturer, model number, and source of procurement of each such product, material or equipment, together with other pertinent information concerning the nature, appearance, dimensions, performance, capacity, and rating. To ensure a timely review the Contractor shall provide a submittal register ten days after contract award showing when shop drawings, samples, or submittals shall be made. When directed to do so, the Contractor shall submit samples for approval at the Contractor's expense, with all shipping charges prepaid. Installation or use of any products, materials or equipment without the required approval shall be at the risk of subsequent rejection.

H.14.2 Custody of Materials. The Contractor shall be responsible for the custody of all materials received for incorporation into the project, including Government furnished materials, upon delivery to the Contractor or to any person for whom it is responsible, including subcontractors. The Contractor shall deliver all such items to the site as soon as practicable. If required by the Contracting Officer, the Contractor shall clearly mark in a manner directed by the Contracting Officer all items of which the Contractor has custody but which have not been delivered or secured at the site, clearly indicating the use of such items for the U.S. Government project.

H.14.3 Basis of Contract Price. The contract price is based on the use of the materials, products and equipment specified in the contract, except for substitutions or "Or-Equal" items proposed by the Contractor which have been specifically approved by the U.S. Government at the time of execution of the contract. Any substitution approved by the Government after execution of the contract shall be subject to an appropriate adjustment of the contract price.

H.14.4 Substitutions

(a) Prior Approval Required. The Contractor must receive approval in writing from the Contracting Officer before substitutions (1) proposed by the Contractor but not yet approved at the time of execution of the contract, or (2) proposed by the Contractor after execution of the contract may be used in the project. Sufficient information to permit evaluation by the Government must accompany any substitution request including but not limited to the reasons for the proposed substitution and data concerning the design, appearance, performance, composition, and relative cost of the proposed substitute. The Contractor shall make requests for substitutions in a timely manner to permit adequate evaluation by the Government. If, in the Contracting Officer's opinion, the use of such substitute items is not in the best interests of the Government, the Contractor must obtain the items originally

specified with no adjustment in the contract price or completion date.

(b) Approval through Shop Drawings. The Contractor may propose substitutions of materials in the submittal of shop drawings, provided such substitution is specifically requested in writing in the transmittal of the shop drawings to the Contracting Officer. Such substitution requests must be made in a timely manner and supported by the required information.

(c) Final Approval on Delivery. Acceptance or approval of proposed substitutions under the contract are conditioned upon approval of items delivered at the site or approval by sample. Approval by sample shall not limit the Government's right to reject material after delivery to the site if the material does not conform to the approved sample in all material respects.

H.14.5 "Or-equal Clause." References in the Specifications/ Statement of Work to materials, products or equipment by trade name, make, or catalog number, or to specific processes, shall be regarded as establishing a standard of quality and shall not be construed as limiting competition. The Contractor may propose for approval or rejection by the Contracting Officer the substitution of any material, product, equipment or process that the Contractor believes to be equal to or better than that named in the Specifications/Statement of Work, unless otherwise specifically provided in this contract.

H.14.6 Use and Testing of Samples.

("Samples" include materials and equipment.)

(a) Use. The Contractor shall send approved samples not destroyed in testing to the Contracting Officer. Those which are in good condition will be marked for identification and may be used in the work. Materials and equipment incorporated in the work shall match the approved samples within any specified tolerances. Other samples not destroyed in testing or not approved will be returned to the Contractor at its expense if so requested.

(b) Failure of Samples. If a sample fails to pass the specified tests described in this contract, any further samples of the same brand or make of that material or equipment may not be considered for use in performance under this contract.

(c) Taking and Testing of Samples. Samples delivered on the site or in place may be taken by the Contracting Officer for additional testing by the Government outside of those required by the Contract documents. Samples failing to meet contract requirements will automatically void previous approvals of the items tested. The Contractor shall replace such materials or

equipment found not to have met contract requirements, unless the Contracting Officer determines it to be in the Government's interest to accept the non-conforming materials or equipment with an appropriate adjustment of the Contract price as determined by the Contracting Officer.

(d) Cost of Additional Testing by the U.S. Government. When additional tests of samples are performed, only one test of each sample proposed for use will be made at the expense of the U.S. Government. Samples which do not meet contract requirements will be rejected. Further testing of additional samples, if required, will be made at the expense of the Contractor.

H.15 Imported Materials, Equipment, and Personnel

H.15.1 Shipment and Customs Clearances

(a) Costs to be Borne by Contractor. The Contractor is responsible for paying all charges incurred in obtaining materials that must be imported for the project and in transporting the materials from their place or origin to the construction site. Moving costs shall include, but not necessarily be limited to, packing, handling, cartage, overland freight, ocean freight, transshipment, port, unloading, customs clearance and duties (other than customs duties specified below), unpacking, storage, and all other charges including administrative costs in connection with obtaining and transporting the materials from their source to the project site.

(b) Duty-free Clearance. The Contractor shall not be responsible for customs duties for which the U.S. Government has been able to obtain a customs waiver. The Contractor shall follow the instructions of the Contracting Officer as to the manner of labeling the shipping containers or otherwise processing shipments of imported materials in order to obtain, or continue to receive, duty free clearance through customs. The Contractor shall be responsible for the payment of customs duties, if any, which:

(1) are imposed on items which are not labeled and processed in accordance with the Contracting Officer's instructions,

(2) are imposed on the Contractor's tools, construction equipment and machinery imported for use on the project, or

(3) are otherwise ineligible for duty-free entry. The Contractor is responsible for customs duties where the Contractor has failed to give adequate and timely notice to the Contracting Officer of importation on containers or materials which may be eligible for a customs waiver. The Contracting Officer will provide instructions concerning time periods for notification of importation by the Contractor.

(c) Customs Clearance. The U.S. Government will be responsible for obtaining customs clearances, and for obtaining exemption certificates or paying customs duties not waived, for imported products, materials and equipment which are labeled and processed in accordance with the Contracting Officer's instructions. The Government shall not be responsible for obtaining customs clearance for the Contractor's tools, construction equipment or machinery, nor for obtaining visas, entry or work permits for the Contractor's personnel.

H.15.2 Surplus Materials. Unless otherwise specified, any surplus materials, fixtures, articles or equipment remaining at the completion of the project shall become the property of the Contractor, except those items furnished by the U.S. Government, whose cost is not included in the contract price.

H.16 Special Warranties

H.16.1 Special Warranty Obligations. Any special warranties that may be required under the contract shall be subject to the stipulations set forth in 52.246-21, "Warranty of Construction," as long as they do not conflict with the special warranty.

H.16.2 Warranty Information. The Contractor shall obtain and furnish to the Government all information required in order to make any subcontractor's, manufacturers, or supplier's guarantee or warranty legally binding and effective. The Contractor shall submit both the information and the guarantee or warranty to the Government in sufficient time to permit the Government to meet any time limit specified in the guarantee or warranty, but not later than completion and acceptance of all work under this contract.

H.17 Equitable Adjustments

H.17.1 Basis for Equitable Adjustments. Any circumstance for which the contract provides an equitable adjustment that causes a change within the meaning of paragraph (a) of the "Changes" clause shall be treated as a change under that clause. The Contractor shall give the Contracting Officer written notice (within 20 days) stating:

(a) the date, circumstances, and applicable contract clause authorizing an equitable adjustment and

(b) that the Contractor regards the event as a changed condition for which an equitable adjustment is allowed under the contract.

H.17.2 Differing Site Condition Notice. The Contractor shall provide written notice of a differing site condition within 10 days of occurrence following FAR 52.236-2, Differing Site Conditions.

H.17.3 Documentation of Proposals for Equitable Adjustments

(a) Itemization of Proposals and Requests. The Contractor shall submit any request for equitable adjustment in the contract price, including any change proposal submitted in accordance with the "Changes" clause, in the form of a lump sum proposal supported with an itemized breakdown of all increases and decreases in the contract price in the detail required by the Contracting Officer, The request shall include all costs and delays related to or arising out of the change or event giving rise to the proposed adjustment, including any delay damages and additional overhead costs.

(b) Proposed Time Adjustments. The Contractor shall submit a proposed time extension (if applicable) with any request for an equitable adjustment or change proposal. The request shall include sufficient information to demonstrate whether and to what extent the change will delay the completion of the contract.

(c) Release by Contractor. The price and time adjustment made in any contract modification issued as a result of a change proposal or request for an equitable adjustment shall be considered to account for all items affected by the change or other circumstances giving rise to an equitable adjustment. Upon issuance of such contract modification, the Government shall be released from any and all liability under this contract for further equitable adjustments attributable to the facts and circumstances giving rise to the change proposal or request for equitable adjustment.

H.18 Noncompliance with Contract Requirements. If the Contractor, after receiving written notice from the Contracting Officer of noncompliance with any requirement of this contract, fails to initiate promptly appropriate action(s) to bring performance/work into compliance with a contract requirement within a reasonable period of time, the Contracting Officer shall have the right to order the Contractor to suspend any or all work under the contract. This order shall be in force until the Contractor has complied or has initiated such action as may be appropriate to comply within a reasonable period of time. The Contractor will not be entitled to any extension of contract time or payment for any costs incurred as a result of being ordered to suspend work for such a cause.

H.19 Zoning Approvals and Building Permits. The U.S. Government is responsible for:

(a) obtaining proper zoning or other land use control approval for the project,
(b) obtaining the approval of the Contract Drawings and Specifications,
(c) paying fees due, and
(d) obtaining and paying for the initial building permits.

Section I: Contract Clauses

I.1 FAR 52.252-2 Clauses Incorporated by Reference (FEB 1998)

This contract incorporates the following clauses by reference, with the same force and effect as if they were given in full text. Upon request, the Contracting Officer will make their full text available. Also, the full text of a clause may be accessed electronically at: http://acquisition.gov/far/index.html or http://farsite.hill.af.mil/vffara.htm. Please note these addresses are subject to change.

If the Federal Acquisition Regulation (FAR) is not available at the locations indicated above, use the Department of State Acquisition website at http://www.statebuy.state.gov/ to access the links to the FAR. You may also use an Internet "search engine" (for example, Google, Yahoo or Excite) to obtain the latest location of the most current FAR.

I.2 The following Federal Acquisition Regulation (FAR) clauses are incorporated by reference (48 CFR CH. 1):

Clause	Title and Date
52.202-1	Definitions (NOV 2013)
52.203-3	Gratuities (APR 1984)
52.203-5	Covenant Against Contingent Fees (MAY 2014)
52.203-6	Restrictions on Subcontractor Sales to the Government (SEPT 2006)
52.203-7	Anti-Kickback Procedures (MAY 2014)
52.203-8	Cancellation, Rescission, and Recovery of Funds for Illegal or Improper Activity (MAY 2014)
52.203-10	Price or Fee Adjustment for Illegal or Improper Activity (MAY 2014)
52.203-12	Limitation on Payments to Influence Certain Federal Transactions (OCT 2010)
52.203-13	Contractor Code of Business Ethics (OCT 2015)
52.203-17	Contractor Employee Whistleblower Rights and Requirement to Inform Employees of Whistleblower Rights (APR 2014)
52.204-4	Printed or Copied Double-Sided on Postconsumer Fiber Content Paper (MAY 2011)
52.204-7	System for Award Management (JULY 2013)
52.204-9	Personal Identity Verification of Contractor Personnel (JAN 2011)
52.204-10	Reporting Executive Compensation and First-Tier Subcontract Awards (OCT 2015)
52.209-6	Protecting the Government's Interest When Subcontracting with Contractors Debarred, Suspended or Proposed for Debarment (OCT 2015)
52.215-2	Audit and Records – Negotiation (OCT 2010)
52.215-8	Order of Precedence – Uniform Contract Format (OCT 1997)

52.215-21 Requirements for Certified Cost or Pricing Data and Data Other Than Certified Cost or Pricing Data – Modifications (OCT 2010)
52.216-7 Allowable Cost and Payment (JUN 2013) Alternate I (FEB 1997)
52.222-1 Notice to the Government of Labor Disputes (FEB 1997)
52.222-19 Child Labor – Cooperation with Authorities and Remedies (JAN 2014)
52.222-50 Combating Trafficking in Persons (MAR 2015)
52.223-18 Encouraging Contractor Policies to Ban Text Messaging While Driving (AUG 2011)
52.225-5 Trade Agreements (NOV 2013)
52.225-13 Restrictions on Certain Foreign Purchases (JUN 2008)
52.225-14 Inconsistency between English Version and Translation of Contract (FEB 2000)
52.228-2 Additional Bond Security (OCT 1997)
52.228-4 Workers' Compensation and War-Hazard Insurance Overseas (APR 1984)
52.228-5 Insurance-Work on a Government Installation (JAN 1997)
52.228-11 Pledges of Assets (JAN 2012)
52.228-13 Alternative Payment Protection (JULY 2000)
52.228-14 Irrevocable Letters of Credit (NOV 2014)
52.229-6 Taxes – Foreign Fixed-Price Contracts (FEB 2013)
52.232-5 Payments under Fixed-Price Construction Contracts (MAY 2014)
52.232-17 Interest (MAY 2014)
52.232-18 Availability of Funds (APR 1984)
52.232-24 Prohibition of Assignment of Claims (MAY 2014)
52.232-27 Prompt Payment for Construction Contract (MAY 2014)
52.232-32 Performance Based Payments (APR 2012)
52.232-33 Payment by Electronic Funds Transfer – System for Award Management (JULY 2013)
52.232-40 Providing Accelerated Payments to Small Business Subcontractors (Dec 2013)
52.233-1 Disputes (MAY 2014) Alternate I (DEC 1991)
52.233-3 Protest after Award (AUG 1996)
52.233-4 Applicable Law for Breach of Contract Claim (OCT 2004)
52.236-2 Differing Site Conditions (APR 1984)
52.236-3 Site Investigations and Conditions Affecting the Work (APR 1984)
52.236-5 Material and Workmanship (APR 1984)
52.236-6 Superintendence by the Contractor (APR 1984)
52.236-7 Permits and Responsibilities (NOV 1991)
52.236-8 Other Contracts (APR 1984)
52.236-9 Protection of Existing Vegetation, Structures Equipment, Utilities, and Improvements (APR 1984)
52.236-10 Operations and Storage (APR 1984)
52.236-11 Use and Possession Prior to Completion (APR 1984)
52.236-12 Cleaning Up (APR 1984)
52.236-14 Availability and Use of Utility Services (APR 1984)
52.236-15 Schedules for Construction Contracts (APR 1984)
52.236-21 Specifications and Drawings for Construction (FEB 1997)

52.236-26 Preconstruction Conference (FEB 1995)
52.242-3 Penalties for Unallowable Costs (MAY 2014)
52.242-13 Bankruptcy (JULY 1995)
52.243-4 Changes (JUN 2007)
52.243-5 Changes and Changed Conditions (APR 1984)
52.244-6 Subcontractor and Commercial Items (OCT 2015)
52.245-1 Government Property (APR 2012)
52.245-9 USE & CHARGES (APR 2012)
52.246-21 Warranty of Construction (MAR 1994)
52.248-3 Value Engineering – Construction (OCT 2010)
52.249-2 Termination for Convenience of the Government (Fixed-Price) (APR 2012) Alternate I (SEPT 1996)
52.249-10 Default (Fixed-Price Construction) (APR 1984)
52.249-14 Excusable Delays (APR 1984)

I.2 The following Department of State Acquisition Regulation (DOSAR) clauses are set forth in full text:

DOSAR 652.204-70 Department of State Personal Identification Card Issuance Procedures (MAY 2011)

(a) The Contractor shall comply with the Department of State (DOS) Personal Identification Card Issuance Procedures for all employees performing under this contract who require frequent and continuing access to DOS facilities, or information systems. The Contractor shall insert this clause in all subcontracts when the subcontractor's employees will require frequent and continuing access to DOS facilities, or information systems.

(b) The DOS Personal Identification Card Issuance Procedures may be accessed at http://www.state.gov/m/ds/rls/rpt/c21664.htm.

DOSAR 652.243-70 Notices (AUG 1999)

Any notice or request relating to this contract given by either party to the other shall be in writing. Said notice or request shall be mailed or delivered by hand to the other party at the address provided in the schedule of the contract. The contracting officer must make all modifications to the contract in writing.

DOSAR 652.242-73 Authorization and Performance (AUG 1999)

(a) The Contractor warrants the following:

(1) that is has obtained authorization to operate and do business in the country or countries in which this contract will be performed;

(2) that is has obtained all necessary licenses and permits required to perform this contract; and

(3) that it shall comply fully with all laws, decrees, labor standards, and regulations of said country or countries during the performance of this contract.

(b) If the party actually performing the work will be a subcontractor or joint venture partner, then such subcontractor or joint venture partner agrees to the requirements of paragraph (a) of this clause.

The following clause is applicable if checked.

[ ]DOSAR 652.229-70 Excise Tax Exemption Statement for Contractors within the United States (JUL 1988)

This is to certify that the item(s) covered by this contract is/are for export solely for the use of the U.S. Foreign Service Post identified in the contract schedule.

The Contractor shall use a photocopy of this contract as evidence of intent to export. Final proof of exportation may be obtained from the agent handling the shipment. Such proof shall be accepted in lieu of payment of excise tax.

DOSAR 652.225-71 Section 8(a) of the Export Administration Acts of 1979, as Amended (AUG 1999)

(a) Section 8(a) of the U.S. Export Administration Act of 1979, as amended (50 U.S.C. 2407(a)), prohibits compliance by U.S. persons with any boycott fostered by a foreign country against a country which is friendly to the United States and which is not itself the object of any form of boycott pursuant to United States law or regulation. The Boycott of Israel by Arab League countries is such a boycott, and therefore, the following actions, if taken with intent to comply with, further, or support the Arab League Boycott of Israel, are prohibited activities under the Export Administration Act:

(1) Refusing, or requiring any U.S. person to refuse to do business with or in Israel, with any Israeli business concern, or with any national or resident of Israel, or with any other person, pursuant to an agreement of, or a request from or on behalf of a boycotting country;

(2) Refusing, or requiring any U.S. person to refuse to employ or otherwise discriminating against any person on the basis of race, religion, sex, or national origin of that person or of any owner, officer, director, or employee of such person;

(3) Furnishing information with respect to the race, religion, or national origin of any U.S. person or of any owner, officer, director, or employee of such U.S. person;

(4) Furnishing information about whether any person has, has had, or proposes to have any business relationship (including a relationship by way of sale, purchase, legal or commercial representation, shipping or other transport, insurance, investment, or supply) with or in the State of Israel, with any business concern organized under the laws of the State of Israel, with any Israeli national or resident, or with any person which is known or believed to be restricted from having any business relationship with or in Israel;

(5) Furnishing information about whether any person is a member of, has made contributions to, or is otherwise associated with or involved in the activities of any charitable or fraternal organization which supports the State of Israel; and,

(6) Paying, honoring, confirming, or otherwise implementing a letter of credit which contains any condition or requirement against doing business with the State of Israel.

(b) Under Section 8(a), the following types of activities are not forbidden "compliance with the boycott," and are therefore exempted from Section 8(a)'s prohibitions listed in paragraphs (a)(1)-(6) above:

(1) Complying or agreeing to comply with requirements:

(i) Prohibiting the import of goods or services from Israel or goods produced or services provided by any business concern organized under the laws of Israel or by nationals or residents of Israel; or,

(ii) Prohibiting the shipment of goods to Israel on a carrier of Israel, or by a route other than that prescribed by the boycotting country or the recipient of the shipment;

(2) Complying or agreeing to comply with import and shipping document requirements with respect to the country of origin, the name of the carrier and route of shipment, the name of the supplier of the shipment or the name of the provider of other services, except that no information knowingly furnished or conveyed in response to such requirements may be stated in negative, blacklisting, or similar exclusionary terms, other than with respect to carriers or route of shipments as may be permitted by such regulations in order to comply with precautionary requirements protecting against war risks and confiscation;

(3) Complying or agreeing to comply in the normal course of business with the unilateral and specific selection by a boycotting country, or national or resident thereof, of carriers, insurance, suppliers of services to be performed within the boycotting country or specific goods which, in the normal course

of business, are identifiable by source when imported into the boycotting country;

(4) Complying or agreeing to comply with the export requirements of the boycotting country relating to shipments or transshipments of exports to Israel, to any business concern of or organized under the laws of Israel, or to any national or resident of Israel;

(5) Compliance by an individual or agreement by an individual to comply with the immigration or passport requirements of any country with respect to such individual or any member of such individual's family or with requests for information regarding requirements of employment of such individual within the boycotting country; and,

(6) Compliance by a U.S. person resident in a foreign country or agreement by such person to comply with the laws of that country with respect to his or her activities exclusively therein, and such regulations may contain exceptions for such resident complying with the laws or regulations of that foreign country governing imports into such country of trademarked, trade named, or similarly specifically identifiable products, or components of products for his or her own use, including the performance of contractual services within that country, as may be defined by such regulations.

DOSAR 652.229-71 Personal Property Disposition at Posts Abroad (AUG 1999)

Regulations at 22 CFR Part 136 require that U.S. Government employees and their families do not profit personally from sales or other transactions with persons who are not themselves entitled to exemption from import restrictions, duties, or taxes. Should the contractor experience importation or tax privileges in a foreign country because of its contractual relationship to the United States Government, the contractor shall observe the requirements of 22 CFR Part 136 and all policies, rules, and procedures issued by the chief of mission in that foreign country.

Contractor Identification (JULY 2008)

Contract performance may require contractor personnel to attend meetings with government personnel and the public, work within government offices, and/or utilize government email.

Contractor personnel must take the following actions to identify themselves as non-federal employees:

(1) use an email signature block that shows name, the office being supported and company affiliation (e.g. “John Smith, Office of Human Resources, ACME Corporation Support Contractor”);

(2) clearly identify themselves and their contractor affiliation in meetings;

(3) identify their contractor affiliation in Departmental e-mail and phone listings whenever contractor personnel are included in those listings; and

(4) contractor personnel may not utilize Department of State logos or indicia on business cards.

Section J: List of Attachments

Attachment J-1 - Statement of Work

Attachment J-2 - Drawings

Attachment J-3 - Breakdown of Proposal Price

Attachment J-4 - Personnel History Statement

Section K: Representations, Certifications, and Other Statements of Offerors

K.1 FAR 52.203-2 Certificate of Independent Price Determination (APR 1985)

(a) The offeror certifies that-

(1) The prices in this offer have been arrived at independently, without, for the purpose of restricting competition, any consultation, communication, or agreement with any other offeror or competitor relating to-
(i) those prices;
(ii) the intention to submit an offer;, or
(iii) the methods or factors used to calculate the prices offered.

(2) The prices in this offer have not been and will not be knowingly disclosed by the offeror, directly or indirectly, to any other offeror or competitor before bid opening (in the case of a sealed bid solicitation) or contract award (in the case of a negotiated solicitation) unless otherwise required by law; and

(3) No attempt has been made or will be made by the offeror to induce any other concern to submit or not to submit an offer for the purpose of restricting competition.

(b) Each signature on the offer is considered to be a certification by the signatory that the signatory-

(1) Is the person in the offeror's organization responsible for determining the prices being offered in this bid or proposal, and that the signatory has not participated and will not participate in any action contrary to subparagraph (a)(1) through (a)(3) above; or

(2)
(i) Has been authorized, in writing, to act as agent for the following principals in certifying that those principals have not participated, and will not participate in any action contrary to subparagraphs (a)(1) through (a)(3) above

_____
[*insert full name of person(s) in the offeror's organization responsible for determining the prices offered in this bid or proposal, and the title of his or her position in the offeror's organization*]; and

(ii) As an authorized agent, does certify that the principals named in subdivision (b)(2)(i) above have not participated, and will not participate, in any action contrary to subparagraphs (a)(1) through (a)(3) above; and

(iii) As an agent, has not personally participated, and will not participate, in any action contrary to subparagraphs (a)(1) through (a)(3) above.

(c) If the offeror deletes or modifies subparagraph (a)(2) above, the offeror must furnish with its offer a signed statement setting forth in detail the circumstances of the disclosure.

K.2 FAR 52.203-11 Certification and Disclosure Regarding Payments to Influence Certain Federal Transactions (SEP 2007)

(a) Definitions. As used in this provision – "Lobbying contact" has the meaning provided at 2 USC 1602(8). The terms "agency", "influencing or attempting to influence", "officer or employee of an agency", "person", "reasonable compensation", and "regularly employed" are defined in the FAR clause of this solicitation entitled Limitation on Payments to Influence Certain Federal Transactions (52.203-12).

(b) Prohibition. The prohibition and exceptions contained in the FAR clause of this solicitation entitled "Limitation on Payments to Influence Certain Federal Transactions" (52.203-12) are hereby incorporated by reference in this provision.

(c) Certification. The offeror, by signing its offer, hereby certifies to the best of his or her knowledge and belief that no Federal appropriated funds have been paid or will be paid to any person for influencing or attempting to influence an officer or employee of any agency, a Member of Congress, an officer or employee of Congress, or an employee of a member of Congress on its behalf in connection with the awarding of this contract.

(d) Disclosure. If any registrants under the Lobbying Disclosure Act of 1995 have made a lobbying contract on behalf of the offeror with respect to this contract, the offeror shall complete and submit, with its officer, OMB Standard Form LLL, Disclosure of Lobbying Activities, to provide the name of the registrants. The offeror need not report regularly employed officers or employees of the offeror to whom payments of reasonable compensation were made.

(e) Penalty. Submission of this certification and disclosure is a prerequisite for making or entering into this contract imposed by 31 USC 1352. Any persons who makes an expenditure prohibited under this provision or who fails to file or amend the disclosure required to be filed or amended by this provision, shall be subject to a civil penalty of not less than $10,000, and not more than $150,000, for each failure.

K.3 FAR 52.204-3 Taxpayer Identification (OCT 1998)

(a) Definitions:

"Common parent", as used in this provision, means that corporate entity that owns or controls an affiliated group of corporations that files its Federal income tax returns on a consolidated basis, and of which the offeror is a member.

"Taxpayer Identification Number (TIN)," as used in this provision, means the number required by the IRS to be used by the offeror in reporting income tax and other returns. The TIN may be either a Social Security Number or an Employer Identification Number.

(b) All offerors must submit the information required in paragraphs (d) through (f) of this provision in order to comply with debt collection requirements of 31 U.S.C. 7701(c) and 3325 (d), reporting requirements of 26 USC 6041, 6041A, and 6050M and implementing regulations issued by the Internal Revenue Service (IRS). If the resulting contract is subject to the reporting requirements described in FAR 4.904, the failure or refusal by the offeror to furnish the information may result in a 31 percent reduction of payments otherwise due under the contract.

(c) The TIN may be used by the Government to collect and report on any delinquent amounts arising out of the offeror's relationship with the Government (3l USC 7701(c)(3)). If the resulting contract is subject to the payment reporting requirements described in FAR 4.904, the TIN provided hereunder may be matched with IRS records to verify the accuracy of the offeror's TIN.

(d) Taxpayer Identification Number (TIN)
TIN: _____
___TIN has been applied for.
___TIN is not required because:
___Offeror is a nonresident alien, foreign corporation, or foreign partnership that does not have income effectively connected with the conduct of a trade or business in the U.S. and does not have an office or place of business or a fiscal paying agent in the U.S.;
___Offeror is an agency or instrumentality of a foreign government;
___Offeror is an agency or instrumentality of the Federal Government.

(e) Type of Organization
___Sole Proprietorship;
___Partnership:
___Corporate Entity (not tax exempt);
___Corporate Entity (tax exempt);
___Government entity (Federal, State, or local);
___Foreign government;

___International organization per 26 CFR 1.6049-4;
___Other _____

(f) Common Parent
___Offeror is not owned or controlled by a common parent as defined in paragraph (a) of this clause.
___Name and TIN of common parent;
Name: _____
TIN: _____

K.4 FAR 52.204-8 Annual Representations and Certifications (DEC 2014)

(a)
(1) The North American Industry Classification System (NAICS) code for this acquisition is 236118 - Construction of Buildings/ Residential Remodeling.
(2) The small business size standard is $36.5 million dollars.
(3) The small business size standard for a concern which submits an offer in its own name, other than on a construction or service contract, but which proposes to furnish a product which it did not itself manufacture, is 500 employees.

(b)
(1) If the provision at 52.204-7, System for Award Management, is included in this solicitation, paragraph (d) of this provision applies.
(2) If the provision at 52.204-7 is not included in this solicitation, and the offeror is currently registered in the System for Award Management (SAM), and has completed the Representations and Certifications section of SAM electronically, the offeror may choose to use paragraph (d) of this provision instead of completing the corresponding individual representations and certifications in the solicitation. The offeror shall indicate which option applies by checking one of the following boxes:
[ ](i) Paragraph (d) applies.
[ ] (ii) Paragraph (d) does not apply and the offeror has completed the individual representations and certifications in the solicitation.

(c)
(1) The following representations or certifications in SAM are applicable to this solicitation as indicated:
(i) 52.203-2, Certificate of Independent Price Determination. This provision applies to solicitations when a firm-fixed-price contract or fixed-price contract with economic price adjustment is contemplated, unless —
(A) The acquisition is to be made under the simplified acquisition procedures in Part 13;
(B) The solicitation is a request for technical proposals under two-step sealed bidding procedures; or
(C) The solicitation is for utility services for which rates are set by law or regulation.

(ii) 52.203-11, Certification and Disclosure Regarding Payments to Influence Certain Federal Transactions. This provision applies to solicitations expected to exceed $150,000.
(iii) 52.204-3, Taxpayer Identification. This provision applies to solicitations that do not include the provision at 52.204-7, System for Award Management.
(iv) 52.204-5, Women-Owned Business (Other Than Small Business). This provision applies to solicitations that —
(A) Are not set aside for small business concerns;
(B) Exceed the simplified acquisition threshold; and
(C) Are for contracts that will be performed in the United States or its outlying areas.
(v) 52.209-2, Prohibition on Contracting with Inverted Domestic Corporations—Representation.
(vi) 52.209-5, Certification Regarding Responsibility Matters. This provision applies to solicitations where the contract value is expected to exceed the simplified acquisition threshold.
(vii) 52.214-14, Place of Performance—Sealed Bidding. This provision applies to invitations for bids except those in which the place of performance is specified by the Government.
(viii) 52.215-6, Place of Performance. This provision applies to solicitations unless the place of performance is specified by the Government.
(ix) 52.219-1, Small Business Program Representations (Basic & Alternate I). This provision applies to solicitations when the contract will be performed in the United States or its outlying areas.
(A) The basic provision applies when the solicitations are issued by other than DoD, NASA, and the Coast Guard.
(B) The provision with its Alternate I applies to solicitations issued by DoD, NASA, or the Coast Guard.
(x) 52.219-2, Equal Low Bids. This provision applies to solicitations when contracting by sealed bidding and the contract will be performed in the United States or its outlying areas.
(xi) 52.222-22, Previous Contracts and Compliance Reports. This provision applies to solicitations that include the clause at 52.222-26, Equal Opportunity.
(xii) 52.222-25, Affirmative Action Compliance. This provision applies to solicitations, other than those for construction, when the solicitation includes the clause at 52.222-26, Equal Opportunity.
(xiii) 52.222-38, Compliance with Veterans' Employment Reporting Requirements. This provision applies to solicitations when it is anticipated the contract award will exceed the simplified acquisition threshold and the contract is not for acquisition of commercial items.
(xiv) 52.223-1, Biobased Product Certification. This provision applies to solicitations that require the delivery or specify the use of USDA-designated items; or include the clause at 52.223-2, Affirmative Procurement of Biobased Products Under Service and Construction Contracts.

(xv) 52.223-4, Recovered Material Certification. This provision applies to solicitations that are for, or specify the use of, EPA-designated items.
(xvi) 52.225-2, Buy American Certificate. This provision applies to solicitations containing the clause at 52.225-1.
(xvii) 52.225-4, Buy American—Free Trade Agreements—Israeli Trade Act Certificate. (Basic, Alternates I, II, and III.) This provision applies to solicitations containing the clause at 52.225-3.
(A) If the acquisition value is less than $25,000, the basic provision applies.
(B) If the acquisition value is $25,000 or more but is less than $50,000, the provision with its Alternate I applies.
(C) If the acquisition value is $50,000 or more but is less than $79,507, the provision with its Alternate II applies.
(D) If the acquisition value is $79,507 or more but is less than $100,000, the provision with its Alternate III applies.
(xviii) 52.225-6, Trade Agreements Certificate. This provision applies to solicitations containing the clause at 52.225-5.
(xix) 52.225-20, Prohibition on Conducting Restricted Business Operations in Sudan—Certification. This provision applies to all solicitations.
(xx) 52.225-25, Prohibition on Contracting with Entities Engaging in Certain Activities or Transactions Relating to Iran-Representation and Certifications. This provision applies to all solicitations.
(xxi) 52.226-2, Historically Black College or University and Minority Institution Representation. This provision applies to solicitations for research, studies, supplies, or services of the type normally acquired from higher educational institutions.

(2) The following certifications are applicable as indicated by the Contracting Officer:
___(i) 52.204-17, Ownership or Control of Offeror.
___(ii) 52.222-18, Certification Regarding Knowledge of Child Labor for Listed End Products.
___(iii) 52.222-48, Exemption from Application of the Service Contract Labor Standards to Contracts for Maintenance, Calibration, or Repair of Certain Equipment- Certification.
___(iv) 52.222-52, Exemption from Application of the Service Contract Labor Standards to Contracts for Certain Services-Certification.
___(v) 52.223-9, with its Alternate I, Estimate of Percentage of Recovered Material Content for EPA-Designated Products (Alternate I only).
___(vi) 52.227-6, Royalty Information.
___(A) Basic.
___(B) Alternate I.
___(vii) 52.227-15, Representation of Limited Rights Data and Restricted Computer Software.

(d) The offeror has completed the annual representations and certifications electronically via the SAM website accessed through https://www.acquisition.gov. After reviewing the SAM database information, the offeror verifies by submission of the offer that the representations and certifications currently posted electronically that apply to this solicitation as indicated in paragraph (c) of this provision have been entered or updated within the last 12 months, are current, accurate, complete, and applicable to this solicitation (including the business size standard applicable to the NAICS code referenced for this solicitation), as of the date of this offer and are incorporated in this offer by reference (see FAR 4.1201); except for the changes identified below [*offeror to insert changes, identifying change by clause number, title, date*]. These amended representation(s) and/or certification(s) are also incorporated in this offer and are current, accurate, and complete as of the date of this offer.

FAR Clause No.	Title	Date	Change
_____	_____	_____	_____

Any changes provided by the offeror are applicable to this solicitation only, and do not result in an update to the representations and certifications posted on SAM.

K.5 FAR 52.209-2 Prohibition on Contracting with Inverted Domestic Corporations — Representation (MAY 2011)

(a) Definition. "Inverted domestic corporation" and "subsidiary" have the meaning given in the clause of this contract entitled Prohibition on Contracting with Inverted Domestic Corporations (52.209-10).

(b) Relation to Internal Revenue Code. An inverted domestic corporation as herein defined does not meet the definition of an inverted domestic corporation as defined by the Internal Revenue Code at 26 U.S.C. 7874.

(c) Representation. By submission of its offer, the offeror represents that—
(1) It is not an inverted domestic corporation; and
(2) It is not a subsidiary of an inverted domestic corporation.

K.6 FAR 52.209-5 Certification Regarding Responsibility Matters (OCT 2015)

(a)
(1) The Offeror certifies, to the best of its knowledge and belief, that -
(i) The Offeror and/or any of its Principals -

(A) Are___ are not___ presently debarred, suspended, proposed for debarment, or declared ineligible for the award of contracts by any Federal agency;
(B) Have___ have not___, within a three-year period preceding this offer, been convicted of or had a civil judgment rendered against them for: commission of fraud or a criminal offense in connection with obtaining, attempting to obtain, or performing a public (Federal, State, or local) contract or subcontract; violation of Federal or State antitrust statutes relating to the submission of offers; or commission of embezzlement, theft, forgery, bribery, falsification or destruction of records, making false statements, tax evasion, violating Federal criminal tax laws, or receiving stolen property (if offeror checks "have", the offeror shall also see 52.209-7, if included in this solicitation); and
(C) Are___ are not___ presently indicted for, or otherwise criminally or civilly charged by a governmental entity with, commission of any of the offenses enumerated in paragraph (a)(1)(i)(B) of this provision; and
(D) Have___, have not___, within a three-year period preceding this offer, been notified of any delinquent Federal taxes in an amount that exceeds $3,500 for which the liability remains unsatisfied.

(1) Federal taxes are considered delinquent if both of the following criteria apply:

(i) The tax liability is finally determined. The liability is finally determined if it has been assessed. A liability is not finally determined if there is a pending administrative or judicial challenge. In the case of a judicial challenge to the liability, the liability is not finally determined until all judicial appeal rights have been exhausted.

(ii) The taxpayer is delinquent in making payment. A taxpayer is delinquent if the taxpayer has failed to pay the tax liability when full payment was due and required. A taxpayer is not delinquent in cases where enforced collection action is precluded.

(2) Examples.

(i) The taxpayer has received a statutory notice of deficiency, under I.R.C. §6212, which entitles the taxpayer to seek Tax Court review of a proposed tax deficiency. This is not a delinquent tax because it is not a final tax liability. Should the taxpayer seek Tax Court review, this will not be a final tax liability until the taxpayer has exercised all judicial appeal rights.

(ii) The IRS has filed a notice of Federal tax lien with respect to an assessed tax liability, and the taxpayer has been issued a notice under I.R.C. §6320 entitling the taxpayer to request a hearing with the IRS Office of Appeals contesting the lien filing, and to further appeal to the Tax Court if the IRS determines to sustain the lien filing. In the course of the hearing, the taxpayer is entitled to contest the underlying tax liability because the taxpayer has

had no prior opportunity to contest the liability. This is not a delinquent tax because it is not a final tax liability. Should the taxpayer seek tax court review, this will not be a final tax liability until the taxpayer has exercised all judicial appeal rights.

(iii) The taxpayer has entered into an installment agreement pursuant to I.R.C. §6159. The taxpayer is making timely payments and is in full compliance with the agreement terms. The taxpayer is not delinquent because the taxpayer is not currently required to make full payment.

(iv) The taxpayer has filed for bankruptcy protection. The taxpayer is not delinquent because enforced collection action is stayed under 11 U.S.C. 362 (the Bankruptcy Code).

(ii) The Offeror has___ has not___, within a three-year period preceding this offer, had one or more contracts terminated for default by any Federal agency.

(2) "Principal," for the purposes of this certification, means an officer; director; owner; partner; or a person having primary management or supervisory responsibilities within a business entity (e.g., general manager; plant manager; head of a division or business segment; and similar positions).

This Certification Concerns a Matter Within the Jurisdiction of an Agency of the United States and the Making of a False, Fictitious, or Fraudulent Certification May Render the Maker Subject to Prosecution Under Section 1001, Title 18, United States Code.

(b) The Offeror shall provide immediate written notice to the Contracting Officer if, at any time prior to contract award, the Offeror learns that its certification was erroneous when submitted or has become erroneous by reason of changed circumstances.

(c) A certification that any of the items in paragraph (a) of this provision exists will not necessarily result in withholding of an award under this solicitation. However, the certification will be considered in connection with a determination of the Offeror's responsibility. Failure of the Offeror to furnish a certification or provide such additional information as requested by the Contracting Officer may render the Offeror nonresponsible.

(d) Nothing contained in the foregoing shall be construed to require establishment of a system of records in order to render, in good faith, the certification required by paragraph (a) of this provision. The knowledge and information of an Offeror is not required to exceed that which is normally possessed by a prudent person in the ordinary course of business dealings.

(e) The certification in paragraph (a) of this provision is a material representation of fact upon which reliance was placed when making award. If it is later determined that the Offeror knowingly rendered an erroneous certification, in addition to other remedies

available to the Government, the Contracting Officer may terminate the contract resulting from this solicitation for default.

K.7 FAR 52.225-18 Place of Manufacture (SEPT 2006)

(a) Definitions. As used in this clause —
"Manufactured end product" means any end product in Federal Supply Classes (FSC) 1000-9999, except—
(1) FSC 5510, Lumber and Related Basic Wood Materials;
(2) Federal Supply Group (FSG) 87, Agricultural Supplies;
(3) FSG 88, Live Animals;
(4) FSG 89, Food and Related Consumables;
(5) FSC 9410, Crude Grades of Plant Materials;
(6) FSC 9430, Miscellaneous Crude Animal Products, Inedible;
(7) FSC 9440, Miscellaneous Crude Agricultural and Forestry Products;
(8) FSC 9610, Ores;
(9) FSC 9620, Minerals, Natural and Synthetic; and
(10) FSC 9630, Additive Metal Materials.
"Place of manufacture" means the place where an end product is assembled out of components, or otherwise made or processed from raw materials into the finished product that is to be provided to the Government. If a product is disassembled and reassembled, the place of reassembly is not the place of manufacture.

(b) For statistical purposes only, the offeror shall indicate whether the place of manufacture of the end products it expects to provide in response to this solicitation is predominantly—
(1) [ ]In the United States (*Check this box if the total anticipated price of offered end products manufactured in the United States exceeds the total anticipated price of offered end products manufactured outside the United States*); or
(2) [ ]Outside the United States.

K.8 FAR 52.225-20 Prohibition on Conducting Restricted Business Operations in Sudan — Certification (AUG 2009)

(a) Definitions. As used in this provision —
"Business operations" means engaging in commerce in any form, including by acquiring, developing, maintaining, owning, selling, possessing, leasing, or operating equipment, facilities, personnel, products, services, personal property, real property, or any other apparatus of business or commerce.
"Marginalized populations of Sudan" means—
(1) Adversely affected groups in regions authorized to receive assistance under section 8(c) of the Darfur Peace and Accountability Act (Pub. L. 109-344) (50 U.S.C. 1701 note); and
(2) Marginalized areas in Northern Sudan described in section 4(9) of such Act.

"Restricted business operations" means business operations in Sudan that include power production activities, mineral extraction

activities, oil-related activities, or the production of military equipment, as those terms are defined in the Sudan Accountability and Divestment Act of 2007 (Pub. L. 110-174). Restricted business operations do not include business operations that the person conducting the business can demonstrate—

(1) are conducted under contract directly and exclusively with the regional government of southern Sudan;
(2) are conducted pursuant to specific authorization from the Office of Foreign Assets Control in the Department of the Treasury, or are expressly exempted under Federal law from the requirement to be conducted under such authorization;
(3) consist of providing goods or services to marginalized populations of Sudan;
(4) consist of providing goods or services to an internationally recognized peacekeeping force or humanitarian organization;
(5) consist of providing goods or services that are used only to promote health or education; or
(6) have been voluntarily suspended.

(b) Certification. By submission of its offer, the offeror certifies that it does not conduct any restricted business operations in Sudan.

K.9 Authorized Contract Administrator

If the offeror does not fill-in the blanks below, the official who signed the offer will be deemed to be the offeror's representative for Contract Administration, which includes all matters pertaining to payments.

Name: _____
Address: _____
_____
_____
Telephone Number: _____ Fax Number: _____

K.10 DOSAR 652.225-70 Arab League Boycott of Israel (AUG 1999)

(a) Definitions. As used in this provision:

"Foreign person" means any person other than a United States person as defined below.

"United States person" means any United States resident or national (other than an individual resident outside the United States and employed by other than a United States person), any domestic concern (including any permanent domestic establishment of any foreign concern), and any foreign subsidiary or affiliate (including any permanent foreign establishment) of any domestic concern which is controlled in fact by such domestic concern, as provided under the Export Administration Act of 1979, as amended.

(b) Certification. By submitting this offer, the offeror certifies that it is not:

(1) Taking or knowingly agreeing to take any action, with respect to the boycott of Israel by Arab League countries, which Section 8(a) of the Export Administration Act of 1979, as amended (50 U.S.C. 2407(a)) prohibits a United States person from taking; or,

(2) Discriminating in the award of subcontracts on the basis of religion.

K.11 DOSAR 652.228-70 Defense Base Act – Covered Contractor Employees (JUN 2006)

(a) Offerors shall indicate below whether or not any of the following categories of employees will be employed on the resultant contract, and, if so, the number of such employees:

Category	Yes/No	Number
(1) United States citizens or residents		
(2) Individuals hired in the United States, regardless of citizenship		
(3) Local nationals or third country nationals where contract performance takes place in a country *where there are no* local workers' compensation laws		Local Nationals: _____ Third Country Nationals: _____
(4) Local nationals or third country nationals where contract performance takes place in a country where there *are* local workers' compensation laws		Local Nationals: _____ Third Country Nationals: _____

(b) The contracting officer has determined that for performance in the country of Japan –

__√__ Workers' compensation laws exist that will cover local nationals and third country nationals.

___ Workers' compensation laws do not exist that will cover local nationals and third country nationals.

(c) If the bidder/offeror has indicated "yes" in block (a)(4) of this provision, the bidder/offeror shall not purchase Defense Base Act insurance for those employees. However, the bidder/offeror shall assume liability toward the employees and their beneficiaries for war-hazard injury, death, capture, or detention, in accordance with the clause at FAR 52.228-4.

(d) Reserved.

K.12 DOSAR 652.209-79 Representation by Corporation Regarding an Unpaid Delinquent Tax Liability or a Felony Criminal Conviction Under Any Federal Law (SEPT 2014) (Deviation per PIB 2014-21)

(a) In accordance with section 7073 of Division K of the Consolidated Appropriations Act, 2014 (Public Law 113-76) none of the funds made available by that Act may be used to enter into a contract with any corporation that –

(1) Was convicted of a felony criminal violation under any Federal law within the preceding 24 months, where the awarding agency has direct knowledge of the conviction, unless the agency has considered, in accordance with its procedures, that this further action is not necessary to protect the interests of the Government; or

(2) Has any unpaid Federal tax liability that has been assessed for which all judicial and administrative remedies have been exhausted or have lapsed, and that is not being paid in a timely manner pursuant to an agreement with the authority responsible for collecting the tax liability, where the awarding agency has direct knowledge of the unpaid tax liability, unless the Federal agency has considered, in accordance with its procedures, that this further action is not necessary to protect the interests of the Government.

For the purposes of section 7073, it is the Department of State's policy that no award may be made to any corporation covered by (1) or (2) above, unless the Procurement Executive has made a written determination that suspension or debarment is not necessary to protect the interests of the Government.

(b) Offeror represents that—

(1) It is[ ] is not[ ] a corporation that was convicted of a felony criminal violation under a Federal law within the preceding 24 months.

(2) It is[ ] is not[ ] a corporation that has any unpaid Federal tax liability that has been assessed for which all judicial and administrative remedies have been exhausted or have lapsed, and that is not being paid in a timely manner pursuant to an agreement with the authority responsible for collecting the tax liability.

Section L: Instructions, Conditions, and Notices to Offerors

L.1 FAR 52.252-1 Solicitation Provisions Incorporated by Reference (FEB 1998)

This contract incorporates the following provisions by reference, with the same force and effect as if they were given in full text. Upon request, the Contracting Officer will make their full text available. The offeror is cautioned that the listed provisions may include blocks that must be completed by the offeror and submitted with its quotation or offer. In lieu of submitting the full text of those provisions, the offeror may identify the provision by paragraph identifier and provide the appropriate information with its quotation or offer. Also, the full text of a solicitation provision may be accessed electronically at: http://acquisition.gov/far/index.html/ or http://farsite.hill.af.mil/vffara.htm. These addresses are subject to change.

If the Federal Acquisition Regulation (FAR) is not available at the locations indicated above, use of the Department of State Acquisition website at http://www.statebuy.state.gov/ or an Internet "search engine" (for example, Google, Yahoo, or Excite) is suggested to obtain the latest location of the most current FAR.

The following Federal Acquisition Regulation (FAR) provisions are incorporated by reference (48 CFR CH. 1):

Provisions	Title and Date
52.204-7	System for Award Management (JULY 2013)
52.204-16	Commercial and Government Entity Code Reporting (NOV 2014)
52.214-34	Submission of Offers in the English Language (APR 1991)
52.215-1	Instructions to Offerors – Competitive Acquisition (JAN 2004)
52.236-28	Preparation of Proposals – Construction (OCT 1997)

L.2 Solicitation Provisions in Full Text

FAR 52.216-1 Type of Contract (APR 1984)

The U.S. Government contemplates award of a firm fixed price contract resulting from this solicitation.

FAR 52.233-2 Service of Protest (SEPT 2006)

(a) Protests, as defined in section 33.101 of the Federal Acquisition Regulation, that are filed directly with an agency, and copies of any protests that are filed with the General Accounting Office (GAO), shall be served on the Contracting Officer (addressed as follows) by obtaining written and dated acknowledgment of receipt from Contracting Officer at the U.S. Embassy, 1-10-5 Akasaka, Minato-ku, Tokyo 107-8420, Japan.

(b) The copy of any protest shall be received in the office designated above within one day of filing a protest with the GAO.

L.3 Qualifications of Offerors. Offerors must be technically qualified and financially responsible to perform the work described in this solicitation. At a minimum, each Offeror must meet the following requirements:

(1) Be able to understand written and spoken English;

(2) Have an established business with a permanent address and telephone listing;

(3) Be able to demonstrate prior construction experience with suitable references for company and Project manager;

(4) List of clients over the past three years, demonstrating prior experience with relevant past performance information and references (provide dates of contracts, places of performance, value of contracts, contact names, telephone and fax numbers and email addresses). If the offeror has not performed comparable services in Japan then the offeror shall provide its international experience. Offerors are advised that the past performance information requested above may be discussed with the client’s contact person. In addition, the client’s contact person may be asked to comment on the offeror’s:

(i) Quality of services provided under the contract;
(ii) Compliance with contract terms and conditions;
(iii) Effectiveness of management;
(iv) Willingness to cooperate with and assist the customer in routine matters, and when confronted by unexpected difficulties; and
(v) Business Integrity/Business Conduct. The U.S. Government will use past performance information primarily to assess an offeror’s capability to meet the solicitation performance requirements, including the relevance and successful performance of the offeror’s work experience. The U.S. Government may also use this data to evaluate the credibility of the offeror’s proposal. In addition, the Contracting Officer may use past performance information in making a determination of responsibility.

(5) Evidence that the offeror/quoter can provide the necessary personnel, equipment, and financial resources needed to perform the work;

(6) The offeror shall address its plan to obtain all licenses and permits required by local law (see DOSAR 652.242-73 in Section 2). If offeror already possesses the locally required licenses and permits, a copy shall be provided.

(7) The offeror's strategic plan for steel door and gate replacement services to include but not limited to:

(i) A work plan taking into account all work elements in Attachment J-1 – Statement of Work.
(ii) Identify types and quantities of equipment, supplies and materials required for performance of services under this contract. Identify if the offeror already possesses the listed items and their condition for suitability and if not already possessed or inadequate for use how and when the items will be obtained;
(iii) Plan of ensuring quality of services including but not limited to contract administration and oversight; and
(iv) if insurance is required by the solicitation, a copy of the Certificate of Insurance(s); **or** a statement that the Contractor will get the required insurance, and the name of the insurance provider to be used.

(8) Reserved;

(9) Have no adverse criminal record; and

(10) Have no political or business affiliation which could be considered contrary to the interests of the United States.

L.4 Review of Documents. Each offeror is responsible for:

(1) obtaining a complete set of contract drawings and specifications;

(2) thoroughly reviewing such documents and understanding their requirements;

(3) visiting the project site and becoming familiar with all working conditions, local laws and regulations; and

(4) determining that all materials, equipment and labor required for the work are available.

Any ambiguity in the solicitation, including specifications and contract drawings, must be reported immediately to the Contracting Officer. Any prospective Offeror who requires a clarification, explanation or interpretation of the contract requirements must make

a request to the Contracting Officer not less than ten working days before the closing date of the solicitation. Offerors may rely ONLY upon written interpretations by the Contracting Officer.

L.5 Submission of Offers

L.5.1 Summary of Instructions. Each offer shall consist of the following physically separate volumes:

Volume	Title	No. of Copies
1	Standard Form 1442, "Solicitation, Offer, and Award (Construction, Alteration, or Repair)"	1
2	Section B: Supplies or Services and Prices/Costs and Attachment J-3 - "Breakdown of Proposal Price"	1
3	Section K: Representations, Certifications, and Other Statements of Offerors	1

Submit the complete offer by mail or hand-deliver to the address indicated below by no later than **4:00 p.m., Tuesday, March 22, 2016 (local time).** No proposals will be accepted after this time, and no electronic proposals shall be accepted.

U.S. Embassy
1-10-5 Akasaka
Minato-ku, Tokyo 107-8420
Japan
Attn: GSO/Procurement Unit
(Solicitation No. SJA800-16-R-0006)

The offeror shall identify and explain/justify any deviations, exceptions, or conditional assumptions taken with respect to any of the instructions or requirements of this solicitation in the appropriate volume of the offer.

L.5.2 Detailed Instructions

(a) Volume 1 – Standard Form 1442. Volume 1 consists of completion of blocks 14 through 20C of the form.

(b) Volume 2 – Prices and Breakdown. Volume 2 consists of completion of the following:

(1) Subsection B.1 Contract Price under Section B, and

(2) Attachment J-3 - Breakdown of Proposal Price under Section J, complete all applicable portions of this form in each relevant category.

(c) Volume 3 – Section K. Volume 3 consists of completion of all portions of Section K that are applicable.

L.6 FAR 52.236-27 Site Visit (FEB 1995)

(a) The clauses at 52.236-2, Differing Site Conditions, and 52.236-3, Site Investigations and Conditions Affecting the Work, will be included in any contract awarded as a result of this solicitation. Accordingly, offerors are urged and expected to inspect the site where the work will be performed.

(b) An organized site visit has been schedule on Tuesday, March 1, 2016 from 2:00 p.m. to on/about 3:30 p.m. (local time).

(c) Participants shall meet at the Grew Gate of Mitsui Housing Compound, located at 2-1-1 Roppongi, Minato-ku, Tokyo.

Note: Attendee(s) must present an identification (ID) card with photo on it (e.g. a driver's license, passport, etc.) as it is required for entering the compound.

L.7 DOSAR 652.206-70 Competition Advocate/Ombudsman (AUG 1999) (Deviation)

(a) The Department of State's Competition Advocate is responsible for assisting industry in removing restrictive requirements from Department of State solicitations and removing barriers to full and open competition and use of commercial items. If such a solicitation is considered competitively restrictive or does not appear properly conducive to competition and commercial practices, potential offerors are encouraged to first contact the contracting office for the respective solicitation. If concerns remain unresolved, contact the Department of State Competition Advocate on (703) 516-1696, by fax at (703) 875-6155, or by writing to:

Competition Advocate
U.S. Department of State
A/OPE
SA-15, Room 1060
Washington, DC 20522-1510

(b) The Department of State's Acquisition Ombudsman has been appointed to hear concerns from potential offerors and contractors during the pre-award and post-award phases of this acquisition. The role of the ombudsman is not to diminish the authority of the Contracting Officer, the Technical Evaluation Panel or Source Evaluation Board, or the selection official. The purpose of the ombudsman is to facilitate the communication of concerns, issues, disagreements, and recommendations of interested parties to the appropriate Government personnel, and work to resolve them. When requested, and appropriate, the ombudsman will maintain strict

confidentiality as to the source of the concern. The ombudsman does not participate in the evaluation of proposals, the source selection process, or the adjudication of formal contract disputes. Interested parties are invited to contact the contracting activity ombudsman, Minister-Counselor for Management Affairs, at Tel: 03-3224-5585 or Fax: 03-3224-5303. For a U.S. Embassy or overseas post, refer to the numbers below for the Department Acquisition Ombudsman.

Concerns, issues, disagreements, and recommendations which cannot be resolved at a contracting activity level may be referred to the Department of State Acquisition Ombudsman at (703) 516-1696, by fax at (703) 875-6155, or by writing to:

Acquisition Ombudsman
U.S. Department of State
A/OPE
SA-15, Room 1060
Washington, DC 20522-1510.

L.8 Magnitude of Construction Project. It is anticipated that the range in price of this contract will be: Between $100,000 and $250,000.

L.9 Financial Statement

If asked by the Contracting Officer, the offeror shall provide a current statement of its financial condition, certified by a third party, that includes:

Income (profit-loss) Statement that shows profitability for the past three years;

Balance Sheet that shows the assets owned and the claims against those assets, or what a firm owns and what it owes; and

Cash Flow Statement that shows the firm’s sources and uses of cash during the most recent accounting period. This will help the Government assess a firm’s ability to pay its obligations.

The U.S. Government will use this information to determine the offeror’s financial responsibility and ability to perform under the contract. Failure of an offeror to comply with a request for this information may cause the Government to determine the offeror to be non-responsible.

Section M: Evaluation Factors for Award

M.1 Evaluation of Proposals

M.1.1 General. To be acceptable and eligible for evaluation, proposals must be prepared in accordance with Section L: Instructions, Conditions and Notices to Offerors and must meet all the requirements set forth in the other sections of this solicitation.

M.1.2 Basis for Award. The U.S. Government intends to award a contract resulting from this solicitation to the lowest priced offeror who is a responsible contractor. The evaluation procedures are set forth below:

(a) Initial Evaluation. The U.S. Government will evaluate all proposals received to ensure that each proposal is complete in terms of submission of each required volume, as specified in Section L. The U.S. Government may reject proposals which are missing a significant amount of the required information.

(b) The U.S. Government reserves the right to reject proposals that are unreasonably low or high in price. Unsuccessful offerors will be notified in accordance with FAR 15.5.

(c) Although the award is to be made to the lowest priced offeror, the U.S. Government may request a list of experience/past performance, licenses/permits if required, and financial statements to determine whether or not the offeror is a responsible contractor.

M.1.3 Award Selection. The U.S. Government will review the prices and other information required and award the contract to the lowest priced offeror who is a responsible contractor.

M.2 Award Without Discussions. Under FAR provision 52.215-1 (included in Section L of this solicitation), award of this contract may be made based on initial proposals and without holding discussions, following FAR 15.306(a)(3).

M.3 Reserved.

M.4 Separate Charges. Separate charges, in any form, are not solicited. The U.S. Government shall not be obligated to pay any charges other than the contract price.

Attachment J-1 - Statement of Work

A. Scope of Work. The Contractor shall replace 19 sets of exterior widow sashes for bedrooms of Marine Security Guards Quarters (MSGQ) at the U.S. Embassy apartment compound (also known as Mitsui Housing Compound), located at 2-1-1 Roppongi, Minato-ku, Tokyo, Japan, as described below. The purpose of the project is to increase the soundproof and insulation levels of the window sashes.

B. General Requirement

B.1 Materials, Appliances, Employees, and Workmanship. Unless otherwise stipulated, the Contractor shall provide all materials, labor, tools, equipment, transportation, and other facilities necessary for the execution and completion of the work. Unless otherwise specified, all materials and work shall meet or exceed Japan Industrial Standards (JIS) and Japan Architectural Specification Standards (JASS). The Contractor shall at all times enforce strict discipline and good order among its employees, and shall not employ any unfit person or anyone not skilled in the work assigned. All the work covered by this contract shall be performed and accomplished in a professional manner of the respective trades.

B.2 Schedule of Work. The required services shall be performed on Monday through Friday from 08:30 to 17:30 hours, excluding American and Japanese holidays observed by the U.S. Embassy Tokyo, Japan, unless approved from the Contracting Officer’s Representative (COR).

B.3 Contractor's Submittal. The Contractor shall submit the shop drawings, material sample, personnel, and vehicle numbers to the COR for approval.

B.4 Inspection and Acceptance by the COR. The COR or COR's designee has a right to inspect and test all the contracted work in progress or completed; therefore, the Contractor shall accept the inspection by the COR or COR's designee. If any of the work does not conform to the contract requirements and specifications, the U.S. Government may require the Contractor to perform the services again in conformity with the contract requirements and specifications, at no additional cost to the U.S. Government.

B.5 Guarantee. The Contractor shall guarantee all the work completed under this contract against any defects resulting from the Contractor’s performance and/or Contractor furnished materials for the period of one year after final inspection and acceptance of the work by the COR. During the guarantee period of one year, the Contractor shall correct any found defects attributed to the Contractor’s responsibilities accordingly at no additional cost to the U.S. Government.

B.6 Electricity, both 240V 3-phase and 115V single phase, at the Mitsui Housing Compound site is available. City water is also available from the faucets/bibcock outside and inside the residence buildings. Electricity and water are provided at no cost to the Contractor during the construction work. Both shall be utilized solely for the contracted work, never for any other purpose.

B.7 Debris produced from the work shall be disposed on a daily basis outside the compound site in compliance with applicable local codes for the industrial general waste disposal. The Contractor shall at all times keep the premises free from accumulation of waste materials, rubbish and/or debris derived from the work or the Contractor's employee, and at the completion of each work day, shall restore the work site to be neat and clean.

C. Work Description - Window Sash Replacement

C.1 The Contractor shall replace window sashes of bedrooms and recreational spaces in existing structure (Rough opening size: W3850XH1550mm). The Contractor shall remove the existing window sashes and discard them.

C.2 Window Sash. The Contractor shall fabricate and install the window sash PRO-SE series from LIXIL (TOSTEM). The Contractor shall use two sets of single side sliding window sash (KATABIKI MADO) in one opening:

(a) Left Side – W1865mm of Single side sliding window sash; and

(b) Right Side – W1865mm of Single side sliding window sash.

The Contractor shall install the window sashes with the SASH COVERING METHOD which installs new sash frames on top of existing sash frames. The Contractor shall submit the shop drawings and receive an approval from the COR prior to the fabrication. The Contractor shall apply caulking for any gaps of new sashes and the exterior.

C.3 Window Glass. The Contractor shall furnish the triple panes soundproof insulated glass SPACIA COOL SHIZUKA from NSG group. The Contractor shall use 9.2mm thickness. The Contractor shall install SRWF film ULTRA 600 manufactured by SUMITOMO 3M on Interior side at the manufacture.

C.4 Insect Screen. The Contractor shall furnish the sliding type insect screens for the single side sliding window sash of LIXIL PRO-SE series.

C.5 Window Shutter. The Contractor shall install the window shutters REFORM SUTTER QUATRO series with type S shutter boxes manufactured by LIXIL (TOSTEM). Shutter must be operated electrically.

C.6 The Contractor shall erect scaffolding for the first floor window replacement and the second floor window sash replacement.

C.7 The Contractor shall check the local fire code if the window sash requires the fire rated window glasses and sashes.

C.8 The Contractor shall relocate any electrical conduits, wires, light fixtures, switches, and A/C pipes for install the window sashes and shutters if necessary.

C.9 The exact locations of window sashes in old Marine structure are shown on the drawings, see Attachment J-2 - Drawings.

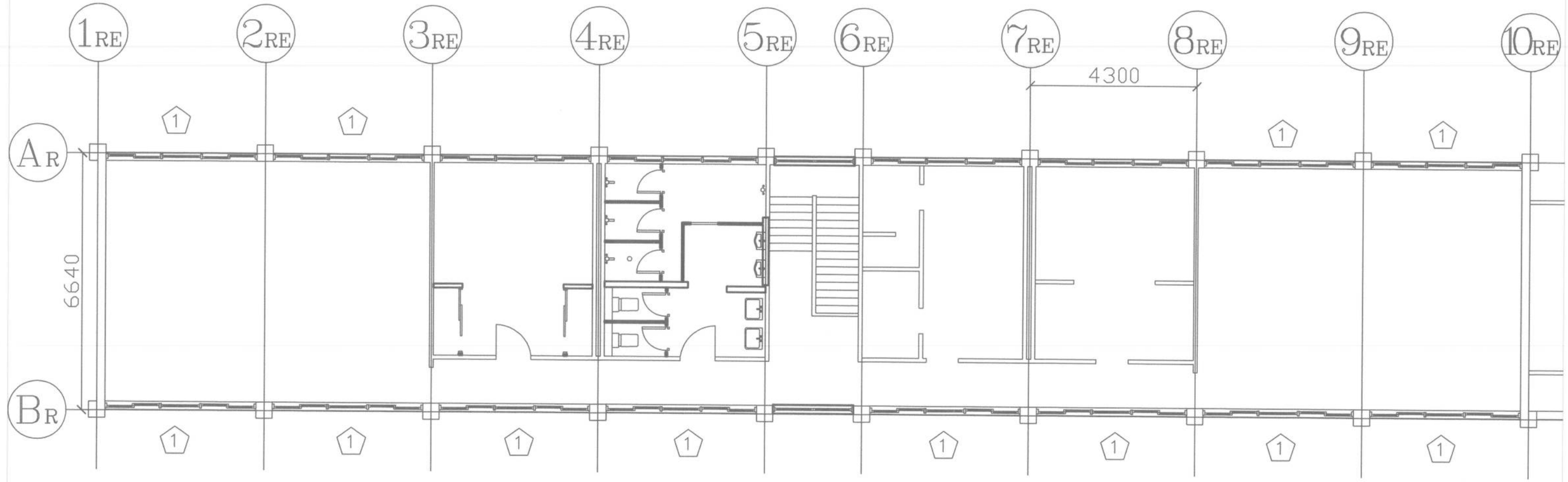

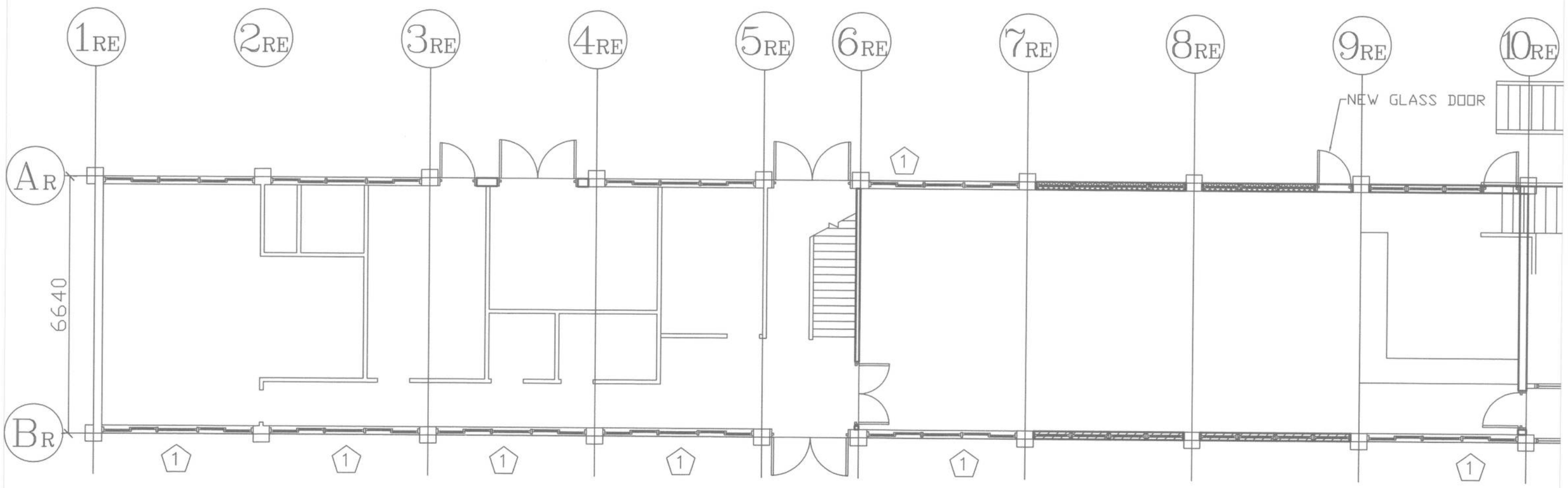

OLD MARINE HOUSE

LIXIL

内観図

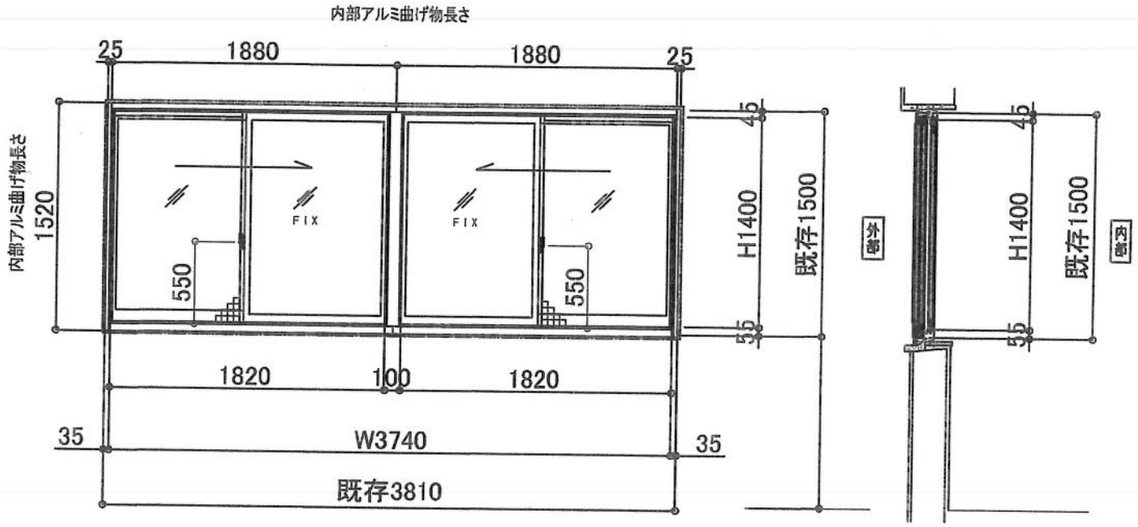

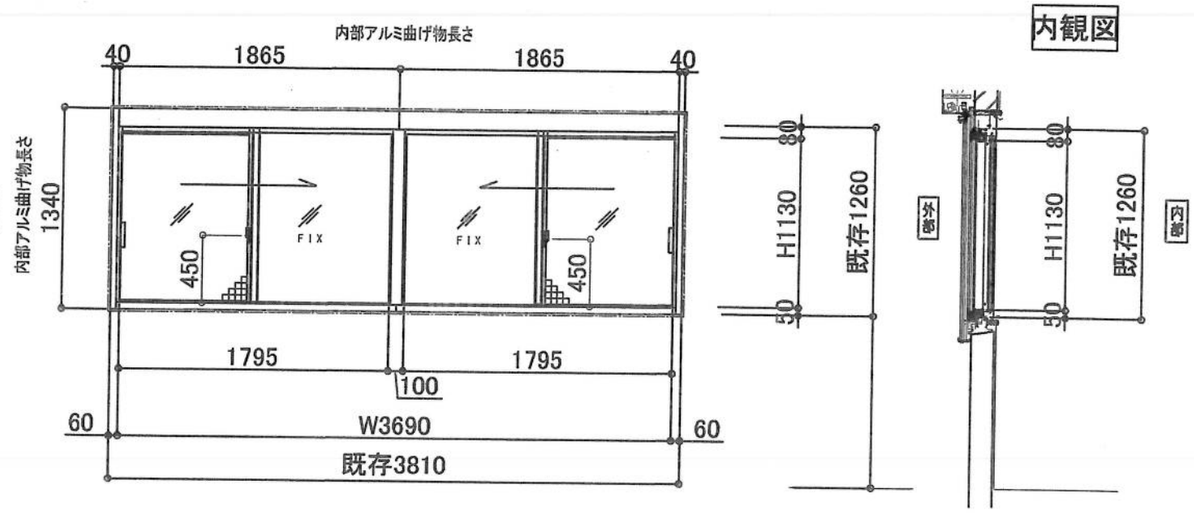

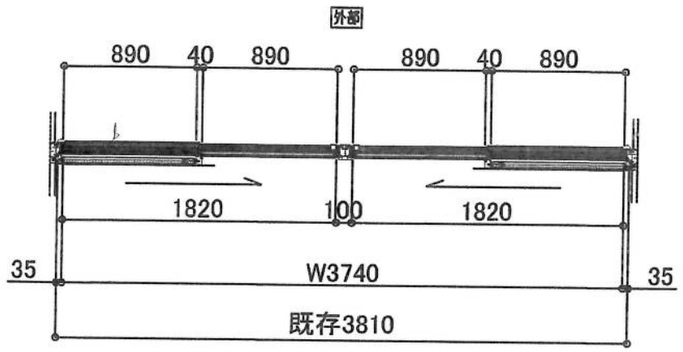

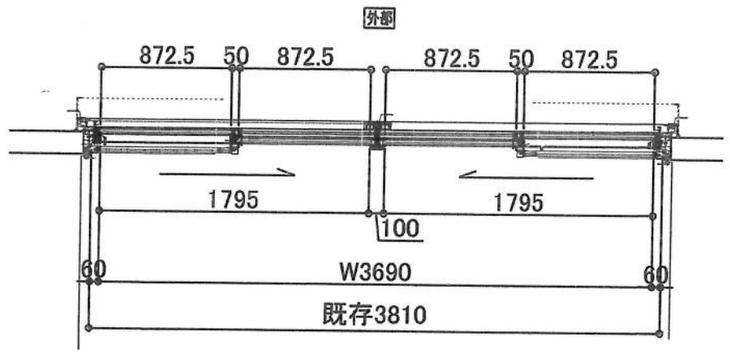

内部

符号	AW 2A	シリーズ	PRO-SE70ALC 片引き(外動)2連窓			色: NTB-ステンカラー		
数量	3	防火・非防火区分	耐風圧	気密性	水密性	遮音性	断熱性	
		(非防火) 防火	S-4	A-4	W-5	T-1	H-1	
網戸	有	機種	プリーツ網戸(アルマーデ3)	ガラス溝幅		ガラス仕舞		
		材質	(PP)・レックス・SUS	30 m/m・断面		ビード・(シール)		
	無	色	ブラック	センサー加工: 有・(無)				

付属部品	部品名	メーカー・品番	数量	備考
	ロック付クレセント(小)	制定品	一式	
	戸車	制定品	一式	
	サブロック	制定品	一式	有り

詳細図番: A-5・7			
取付場所	2F-3か所	特記事項	サッシカバー工事 内部アルミ曲げ物仕様

内部

符号	AW 1	シリーズ	PRO-SE100 片引き(外動)2連窓			色: NTB-ステンカラー		
数量	12	防火・非防火区分	耐風圧	気密性	水密性	遮音性	断熱性	
		(非防火) 防火	S-5	A-4	W-5	T-2	H-2	
網戸	有	機種	プリーツ網戸(アルマーデ3)	ガラス溝幅		ガラス仕舞		
		材質	(PP)・レックス・SUS	36 m/m・断面		ビード・(シール)		
	無	色	ブラック	センサー加工: 有・(無)				

付属部品	部品名	メーカー・品番	数量	備考
	ロック付クレセント(小)	制定品	一式	
	戸車	制定品	一式	
	サブロック	制定品	一式	有り

詳細図番: A-6・7			
取付場所	1F-4か所 2F-8か所	特記事項	サッシカバー工事 内外部アルミ曲げ物仕様

訂正			図面内容	工事名	受領印	株式会社LIXIL	スケール 1/20
△				アメリカ大使館海兵隊宿舎	年 月 日	照査	設計	図番
△						○	杉本	A-1A
△								
△								
△								
△			コード					

LIXIL

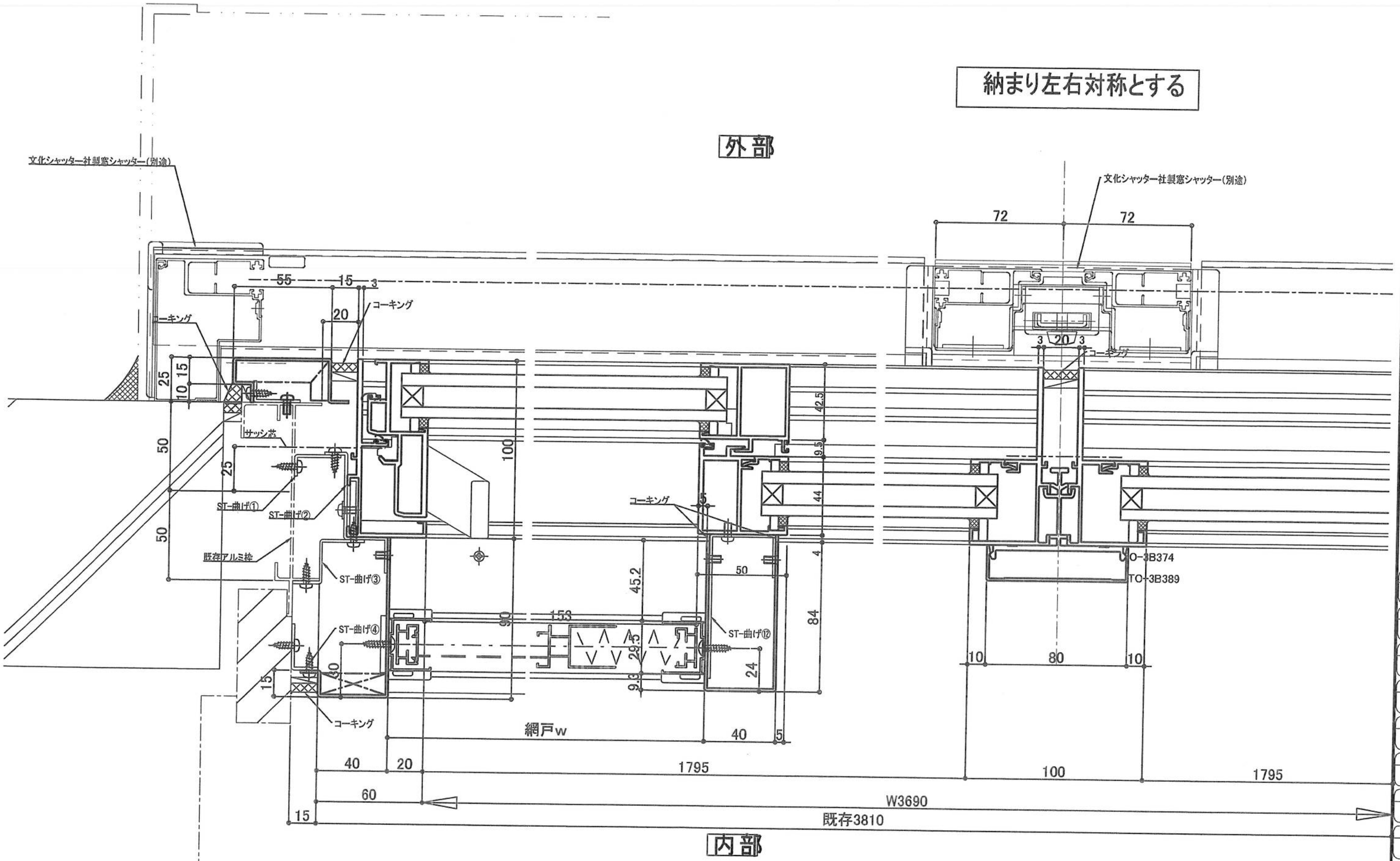

訂正	図面内容	工事名	受領印	株式会社LIXIL	スケール 1/2
△		アメリカ大使館海兵隊宿舎	年 月 日	照査 ○ / 設計 杉本	図番 A-2
△					
△					
△					
△					
△					
	コード				

AW 1

LIXIL

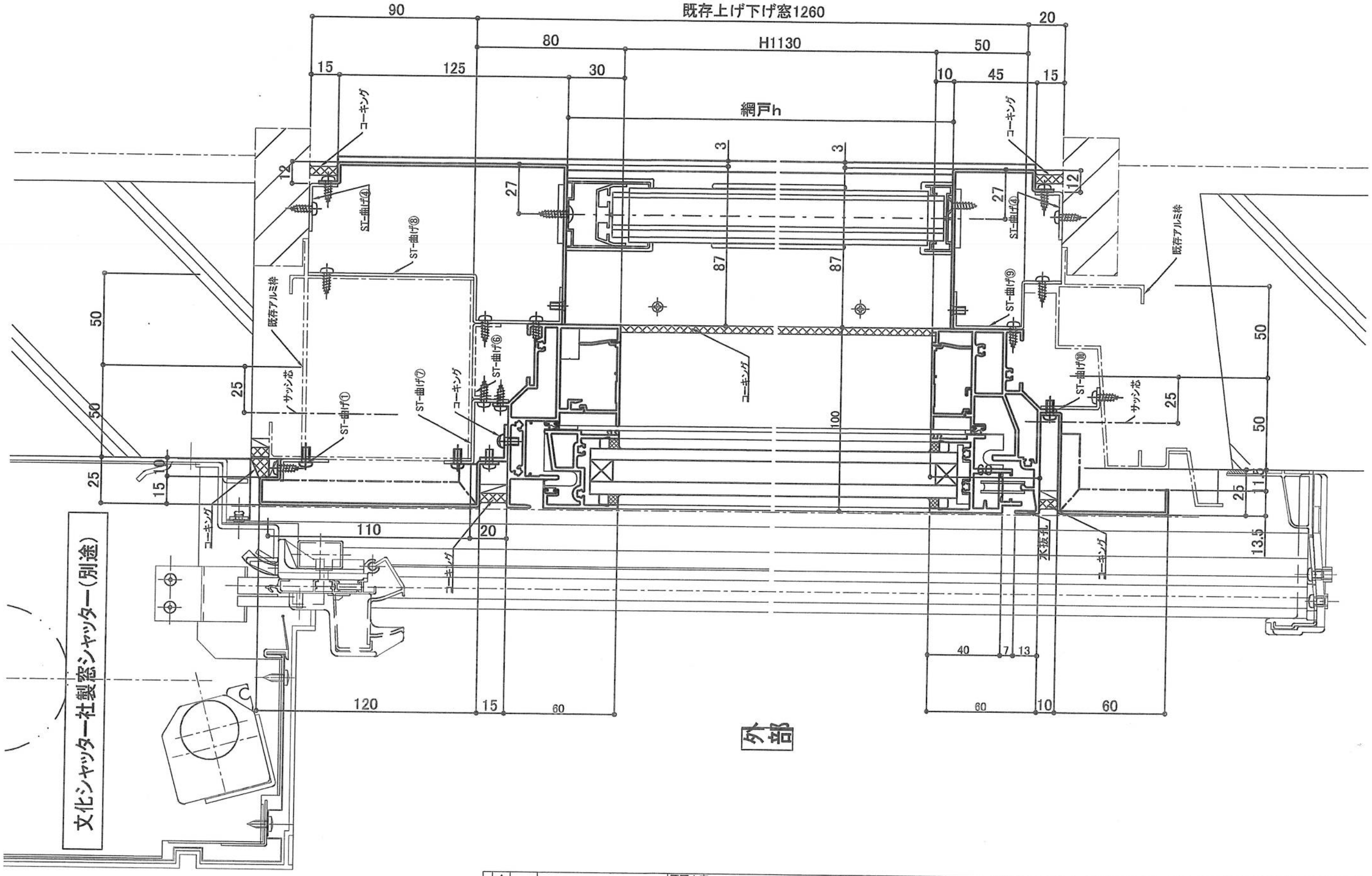

訂正 △	図面内容	工事名	受領印
	コード	アメリカ大使館海兵隊宿舎	年 月 日

株式会社 LIXIL	スケール
照査	1/2
設計 杉本	図番 A-3

AW 1

LIXIL

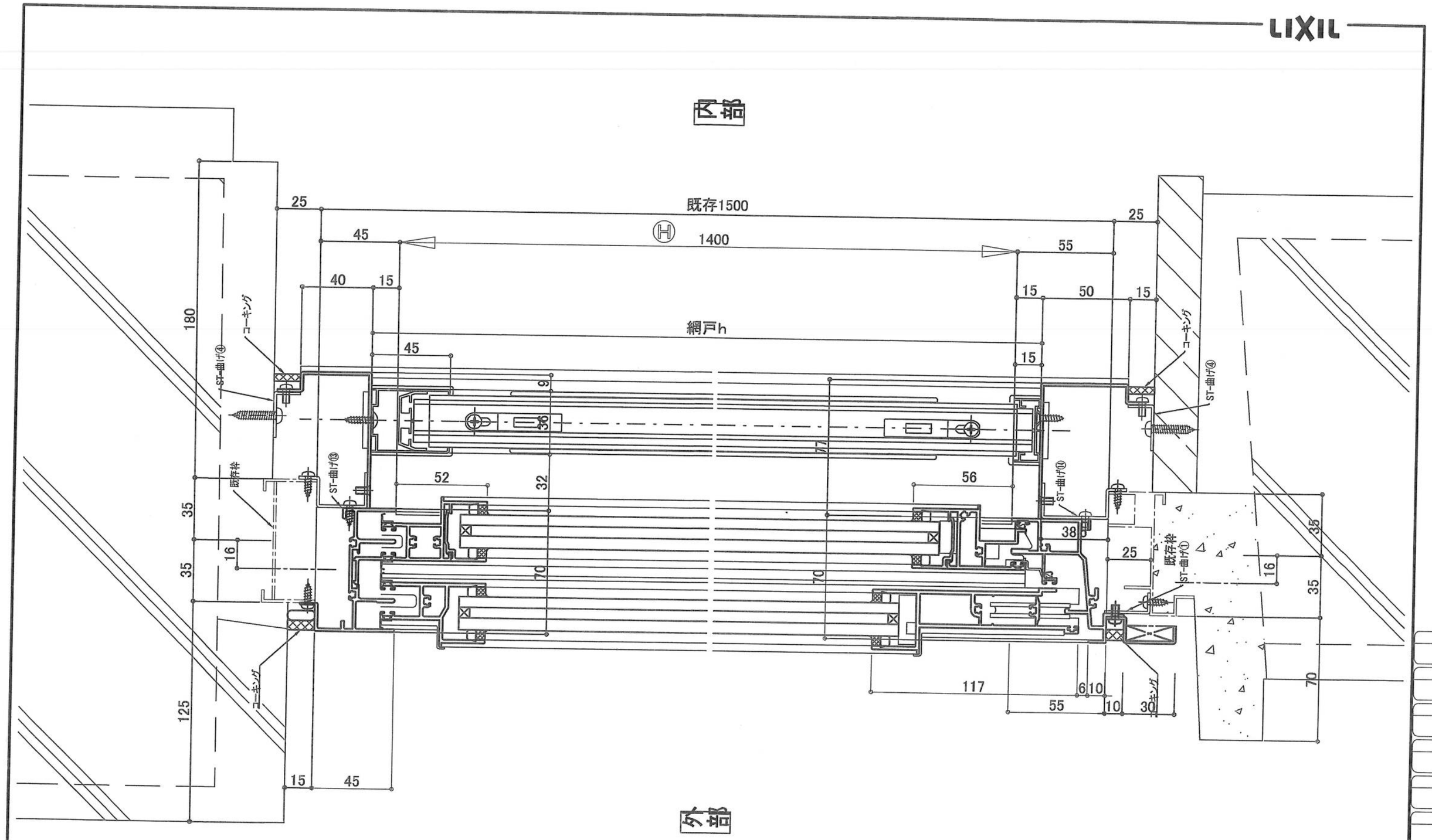

訂正 △ △ △ △ △ △	図面内容 PRO-SE 70 片引き窓 外動 外押縁 アルミ下枠 戸先一般 Aタイプ コード AIK-30-001	工事名 アメリカ大使館海兵隊宿舎	受領印 年 月 日	株式会社 LIXIL 照査 ○ 設計 杉本	スケール 1/20 図番 A-7

AW 2B
AW 2A

LIXIL

左右納まり対象とする

外部

コーキング(別途)

□-60×60×2.3t
(別途)

コーキング

既存枠

ST-曲げ⑦

ST-曲げ④

コーキング

注意:干渉確認

網戸w

内部

Ⓦ 3740

既存3810

訂正 △ △ △ △ △ △	図面内容 PRO-SE 70 片引き窓 外動 外押縁 アルミ下枠 戸先一般 Aタイプ コード:A1K-30-001	工事名 アメリカ大使館海兵隊宿舎	受領印 年 月 日	株式会社LIXIL 照査	設計 杉本	スケール 1/2 図番 A-9

AW
2C

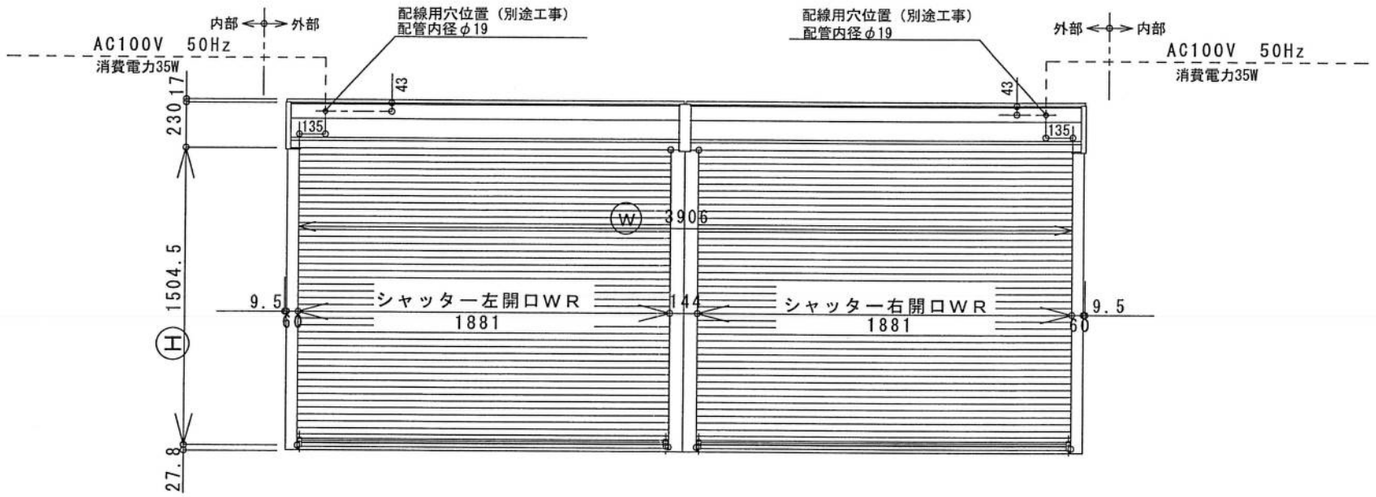

AS
1
外 観 図

電 動			
スラット	カラー鋼板	レール	アルミ押出形材
座 板	アルミ押出形材	ケース	カラー鋼板

シャッター符号		ＡＳ－１
サッシ符号		ＡＷ－１
数		１
サッシ内法	右Ｗ	１７９５
	左Ｗ	１７９５
	Ｗ	３６９０
	Ｈ	１１３０
ｼｬｯﾀｰ開口	右ＷＲ	１８８１
	左ＷＲ	１８８１
	Ｗ	３９０６
	Ｈ	１５０４．５
取付個所		１Ｆ

色：Ｕ４

ケース	ビューステン
スラット	ビューステン
枠部材	ステンカラーUB色

備考

ワイヤレス

AS
1
取付場所

変更内容	日 時	設計 監理	工事名称	アメリカ大使館海兵隊宿舎
	／ ／	施工	品名 図名	ﾏﾄﾞﾏｽﾀｰﾀｯﾌﾟ 連窓 電動標準 ｽﾀﾝﾀﾞｰﾄﾞﾓﾃﾞﾙ 姿 図(AW-1)
		調査 有泉 / 設計 14.11.13 小川 SU / 営業 定岡 / 縮尺 1/3	BX 文化シャッター株式会社 住建横浜営業所	図面番号 1/6

受注No.X28-51063

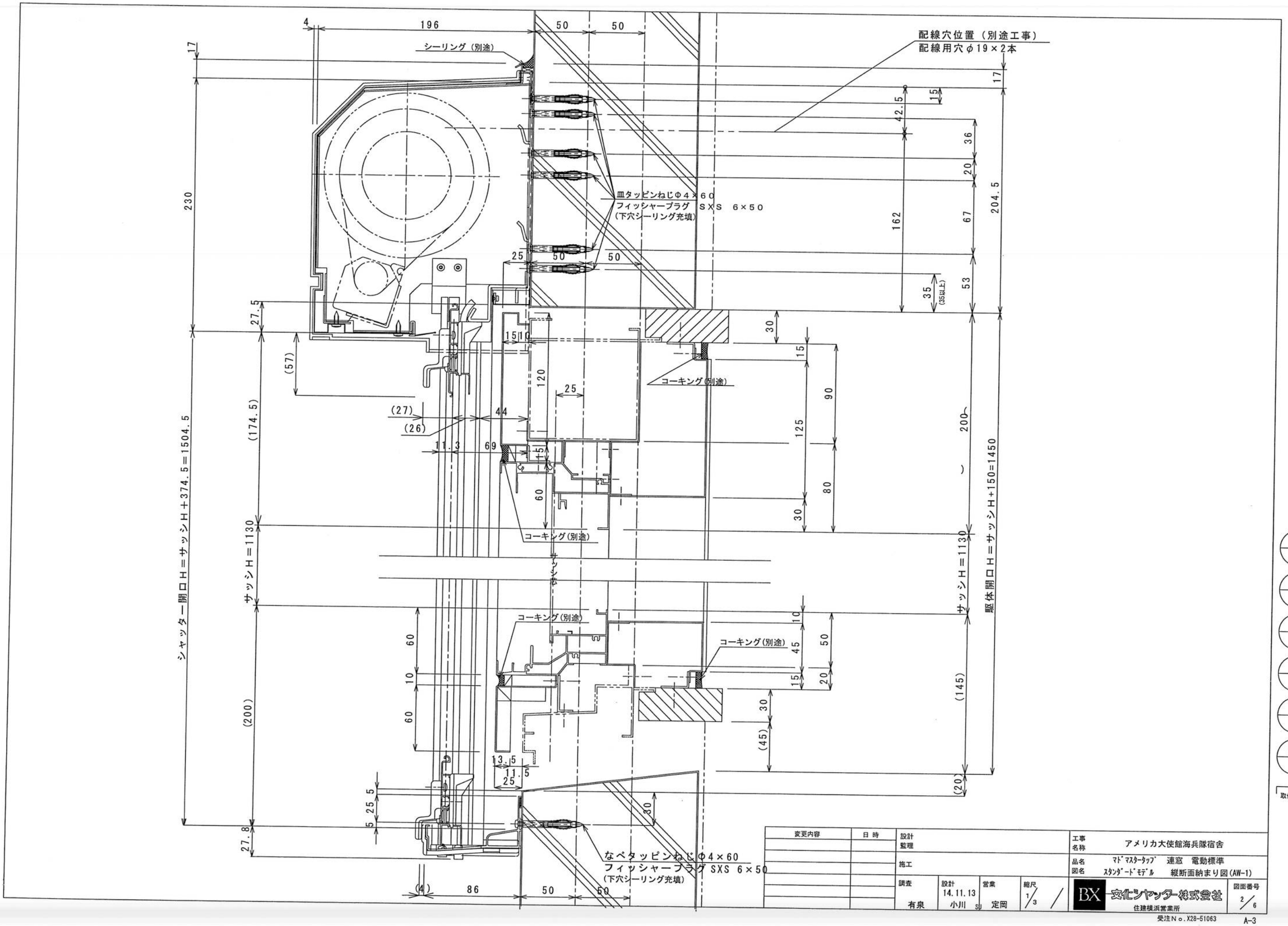

変更内容	日時	設計	工事名称	アメリカ大使館海兵隊宿舎
		監理		
		施工	品名	ﾏﾄﾞﾏｽﾀｰﾀｯﾌﾟ 連窓 電動標準
			図名	ｽﾀﾝﾀﾞｰﾄﾞﾓﾃﾞﾙ 縦断面納まり図(AW-1)
		調査 有泉 / 設計 14.11.13 小川 / 営業 定岡	縮尺 1/3	文化シヤッター株式会社 住建横浜営業所
				図面番号 2/6

受注No.X28-51063

A-3

Attachment J-3 - Breakdown of Proposal Price

a. All currency amounts shall be expressed in Japanese Yen.

(1) Division/ Description	(2) Labor	(3) Materials	(4) Overhead	(5) Profit	(6) Subtotal
1. General Requirements/ Mobilization	¥	¥	¥	¥	¥
2. Site Work	¥	¥	¥	¥	¥
3. Concrete	¥	¥	¥	¥	¥
4. Masonry	¥	¥	¥	¥	¥
5. Metals	¥	¥	¥	¥	¥
6. Wood and Plastic	¥	¥	¥	¥	¥
7. Thermal and Moisture	¥	¥	¥	¥	¥
8. Doors and Windows	¥	¥	¥	¥	¥
9. Finishes	¥	¥	¥	¥	¥
10. Specialties	¥	¥	¥	¥	¥
11. Equipment	¥	¥	¥	¥	¥
12. Furnishings	¥	¥	¥	¥	¥
13. Special Construction	¥	¥	¥	¥	¥
14. Conveying Systems	¥	¥	¥	¥	¥
15. Mechanical	¥	¥	¥	¥	¥
16. Electrical	¥	¥	¥	¥	¥
Subtotals	**¥**	**¥**	**¥**	**¥**	**TOTAL: ¥**

b. Proposal Price Total stated in Japanese Yen: ¥ _____

c. Offeror:

x _____ Date: _____
[insert company name]

Regional Security Office Tokyo Security Form

Please type or write in legible block letters.
Use number 19 if you need extra space for your detailed answers.
和文・英文両方で明確に書いて下さい。 英文に関しては、タイプするか活字体で記入して下さい。
（記入欄が不足した場合には、設問19にそれぞれの番号を付した上、ご記入ください。）

1. Name
氏名 _____ / _____ / _____
(LAST /苗字) (First/名前) (Middle)

2. Alias/Maiden name
別姓・旧姓 _____

3. Date of Birth
生年月日 Year 年 Month 月 Day 日

4. Nationality 国籍 _____

5. Marital Status 婚暦			
☐	☐	☐	☐
Single 独身	Married 婚姻	Widowed 寡婦/夫	Divorced 離婚

6. Place of Birth (City/State) 出生地(都道府県/区市町村) _____

7. Permanent Address
本 籍 地 _____

8. Present Address
現 住 所 _____
〒 _____

9. TEL : CELL: EMAIL: _____

10. Previous addresses of past 7 years. From present to past. (過去7年間の住所を新しい順に。)

Duration 期間	Address 住所
(例'98年4月～'00年9月	〒107-0051 東京都港区赤坂1-10-5)

PHOTO

11. Last Education （最終学歴）			
DATES	NAME OF SCHOOL	DEPARTMENT, MAJOR	ADDRESS
～			
期間	学校名	学部・学科	住所
～			

12. Employments of past 7 years. From present to past. (過去7年間の職業。新しい順に) (From/ To/ Name of Company / Address, 期 間 / 会 社 名 / 所 在 地)		
Dates/期間	Name of Company/ 就業先名	Address and Phone Number/ 住所、電話番号
～		
～		
～		
～		
～		
～		

13. Biological Sketch (Parents, Spouse, Children, Siblings, In-Laws) 家族構成(両親、配偶者、子供、兄弟姉妹、義父母)					
Name	Relationship	DOB	Nationality	Occupation (Detailed)	Residence(City,Country)
名前	関係	生年月日	国籍	職業(具体的に)	居住地(町, 国)
	父 (Father)				
	母 (Mother)				

14. Three References residing in Japan: **Do not include family or relatives**. （日本在住の参考人3名、住所と電話番号。**家族及び親戚を除く**。）		
Name / 名 前	Address / 住 所	
勤務先, 就学先名	郵便番号	Telephone/ 電話番号
	〒	
	〒	
	〒	

15. Travel History (List your overseas travel in the last 7 years, start with most recent one.) 渡航暦 (現在から過去 7 年まで遡って記入してください。)				
Country 国名	DATES 期間		Type of Visa ビザ	Pirpose 目的
	From	To		

16. Health Conditions 健康状態(If answer is "YES" please give details under Item #19.)		
"YES" の回答があれば,設問19に詳細を書き込んでください。	**YES**	**NO**
Have you now or have you ever had any physical limitations? 過去に身体的制約（ハンディキャップ）を持っていた、もしくは現在持っていますか？	☐	☐
Are you now under a physician's care? 現在、医師にかかっていいますか？	☐	☐
Have you ever had a nervous disorder? 神経系疾患を患った事がありますか？	☐	☐
Have you ever had tuberculosis? 結核を患った事がありますか？	☐	☐
Within the past 12 months, have you used intoxicating beverages or drug to excess? 過去１２ヶ月内で酒類や薬物を過剰に摂取しましたか？	☐	☐
Do you have a drug, narcotic or alcohol addiction? 薬物、麻薬もしくはアルコール依存の症状がありますか？	☐	☐

17. Have you ever been arrested or detained by any police or military authority? If so, name the authority, give the time, place and reason for arrest or detention and the disposition of court action.
警察に逮捕されたことがありますか？あれば警察名、年月日、場所、理由、処分等を記入してください。

18. Draw a map of your residence to the nearest train station using the space below.
最寄りの駅より自宅までの地図を詳細に書いて下さい。

19. Use this space for detailed answers. Number answers to correspond with the questions. Use extra blank pages, if necessary.
空欄を使用し、設問の番号と共に回答の詳細を記入してください。必要であれば空白のページを追加して下さい。

This is to certify that the information provided herein is true to the best of my knowledge.
以上相違ありません。

Signature (署 名)

Date (日付)